OWNER'S MANUAL

CT104 - 10" HYBRID TABLE SAW

TABLE OF CONTENTS

GENERAL SAFETY INSTRUCTIONS

EXTREME CAUTION SHOULD BE USED IN OPERATING ALL POWER TOOLS. KNOW YOUR POWER TOOL, BE FAMILIAR WITH ITS OPERATION. READ THE OWNER'S MANUAL AND PRACTICE SAFE USAGE PROCEDURES AT ALL TIMES.

- **CONNECT** your machine **ONLY** to the matched and specified power source.
- **WEAR SAFETY GLASSES, RESPIRATORS, HEARING PROTECTION** and **SAFETY SHOES** when operating heavy machinery. **Always wear safety glasses.**
- **DO NOT** wear loose clothing or jewellery when operating machinery.
- **A Safe Environment is important**. Keep the area free of dust, dirt and other debris in the immediate vicinity of the machine.
- **BE ALERT**! Do Not Use prescription or other drugs that may affect your ability or judgement to safely use this machine.
- **DISCONNECT** the power source when changing blades or making adjustments or repairs.
- **NEVER** leave an operating tool unattended.
- **NEVER** reach over the table when the tool is in operation.
- **ALWAYS** keep blades sharp and properly aligned.
- **ALWAYS** keep all safety guards in place and ensure their proper function.
- **ALWAYS** use push sticks and featherboards to safely feed your work through the machine.
- **ALWAYS** make sure that any tools used for adjustments are removed before operating the machine.
- **ALWAYS** secure your work with the appropriate clamps or vises if necessary.
- **ALWAYS** keep bystanders safely away while operating machinery.
- **THINK SAFETY. WORK SAFELY.** Never attempt a procedure if it does not feel safe or comfortable.

ADDITIONAL SAFETY RULES FOR CONTRACTOR SAW

1. Keep hands and fingers out of the saw blade path. Use extra caution when making bevel cuts.

2. Always use blade guard and splitter for every operation for which it can be used, including through sawing.

3. Always support work with table and fence or miter gauge.

4. Never use fence and miter gauge together.

5. Make sure the saw blade is securely mounted before operating.

6. Never remove jammed or cut-off pieces until power is off and blade has stopped.

7. Feed workpiece into the saw blade against the rotation of the blade or cutter only.

8. Do not perform any operation freehand.

9. Do not use lubricants or cleaners (particularly spray or aerosol) in the vicinity of the plastic guard. Certain chemicals can corrode the polycarbonate material used in the guard.

10. Understand kickback and take steps to reduce the risk of kickback.

11. Disconnect the contractor saw from the power source and remove the switch paddle before changing the setup, or removing any covers, guards or the sawblade.

12. Never reach around or over saw blade.

SAW BLADE AND SPLITTER

The table saw is equipped with a blade guard and splitter assemblv that covers the blade and prevents accidental contact. The splitter is a flat plate that fits into the cut made by the saw blade and effectively reduces the chance of kickback by lessening the tendency of the blade to bind in the cut. The splitter can only be used when making through cuts that sever the wood. When making dadoes, rabbets and other cuts that make less than through cuts, the blade guard and splitter must be removed from the saw.

NOTE: Be sure to re-install guard and splitter after these cuts. Two anti-kickback pawls are located on the sides of the splitter that allow the wood to pass through the blade in the cutting direction but lock it if it tries to move backwards toward the operator.

TERMINOLOGY:

Through Sawing refers to any cut that severs the workpiece. Push-Stick refers to a wooden stick, usually homemade, that is used to push small workpieces through the saw and keeps the operator's hands clear of the blade. Kickback occurs when the saw blade binds in the cut and violently thrusts the workpiece back toward the operator. Freehand refers to cutting without the use of a miter gauge or rip fence, or any other means of guiding or holding the workpiece with the operator's hand.

KICKBACK- HOW TO AVOID IT AND PROTECT YOURSELF FROM POSSIBLE INJURY

The dangers of kickback cannot be overstated. It is caused by the workpiece binding against the blade. The result is that the workpiece can move rapidly in a direction opposite to the feed direction. During kickback, the workpiece can be thrown back at the operator. It can also drag the operator's hand into the blade if the operator's hand is in the wrong place. To prevent the danger of kickback, follow these guidelines:

1. Always use the guard, and make certain it is in good working order. The guard's splitter helps prevent binding, and the anti-kickback pawls on each side of the splitter minimize the possibility of kickback. Use extra caution until the workpiece is through the splitter and has engaged the anti-kickback pawls.

KICKBACK- HOW TO AVOID IT AND PROTECT YOURSELF FROM POSSIBLE INJURY

2. Do not saw warped, bowed or cupped wood. The workpiece must have one straight smooth side to go against the rip fence or miter gauge. The workpiece must sit flat on the table without rocking.

3. Do not cut "freehand". Always use either the rip fence or the miter gauge. Never use both.

4. Use extra care when the guard assembly cannot be used (during dadoing or molding).

5. Support large workpieces carefully. Allowing them to sag or drop can cause kickback.

6. Be certain that the rip fence is parallel to the saw blade.

7. Do not rip by applying the feed force to the section of the workpiece that will become the cut off (free) piece. Feed force when ripping should always be applied between the saw blade and the fence; use a push stick for short work 6" wide or less. For less than 2" wide, you must use a special fixture.

8. Keep saw blade guard, splitter and anti-kickback pawls in place and operating properly. Keep pawls sharp. If pawls are not operational, return your unit to your dealer for repair. The splitter must be in alignment with the saw blade and the pawls must stop a kickback once it has started. Check their action before ripping.

9. Plastic and composite materials such as hardboard can be cut on this table saw. However, please note that these materials are usually quite hard and slippery, and the anti-kickback pawls may not stop a kickback. Therefore, be especially attentive to following proper setup and cutting procedures for ripping.

   Use saw blade guard and splitter for every operation in which they can be used, including all through sawing.

MAKING A PUSH STICK

In order to operate your table saw safely, you must use a push-stick whenever the size or shape of the workpiece will cause your hands to be within 6" of the saw blade.
No special wood is needed to make a push-stick as long as it is sturdy and long enough. A length 12" is recommended with a notch that fits against the edge of the workpiece to prevent slipping. It is a good idea to have several push-sticks of the same length 12" with different sized notches for workpieces of different thickness. Below is a sample pattern for a push-stick. The shape can vary to suit your own needs as long as it performs the intended function of keeping your hands away from the saw blade.

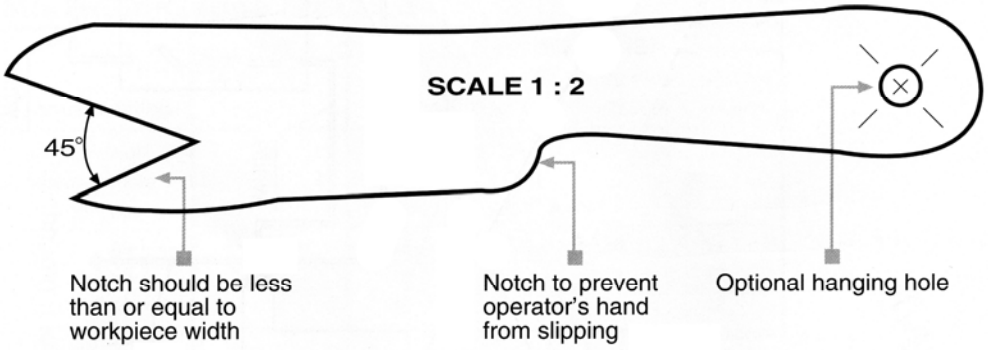

Make the push stick from hardwood or plywood less than or equal to the width of the workpiece to be cut.

The length of the stick should be long enough that the operator's hand will clear the blade guard and rip fence.

LOOSE PARTS- FASTENERS AND KNOBS

The hardware bags contain all the necessary nuts, bolts and washers to assemble
The fasteners, knobs and inserts are as follows:

TABLE EXTENSION FASTENERS

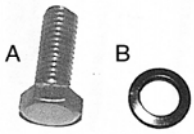

A) Hexagonal head screw x 8
B) Spring washer x 8

HANDWHEEL FASTENERS

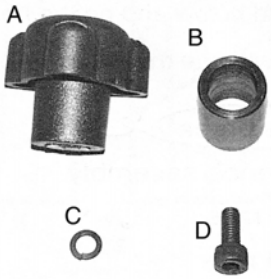

A) Lock knob x 1
B) Spacing collar x 1
C) Spring washer x 1
D) Cap screw x 1

FRONT AND REAR RAIL PLATES

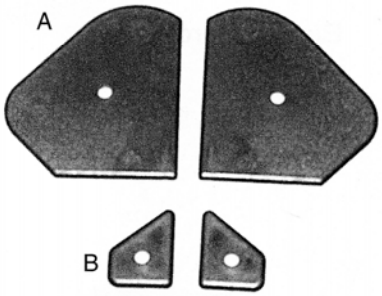

A) Front rail end cover x 2
B) Rear rail end cover x 2

FRONT AND REAR RAIL FASTENERS AND COMPONENTS

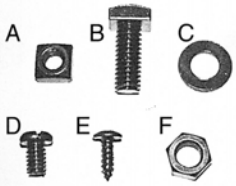

A) Square nut x 2
B) Square head screw x 12
C) Spring washer x 12
D) Round cross head screw x 2
E) Self tapping screw x 4
F) Nut x 12

UNPACKING AND ASSEMBLY

Carefully unpack the table saw and all loose items from the carton. Examine all parts to make sure that parts have not been damaged during shipping. If any parts are missing or damaged, contact your dealer to replace them before attempting to assemble the table saw. Pictured below and on the next page are all the loose items except the fasteners that are packed with the machine.

A. Rip fence assembly
B. Rear rails
C. Front rails
D. Spanner (2)
E. Handwheels (2)
F. Hex wrenches (5)
G. Miter assembly
H. Blade guard

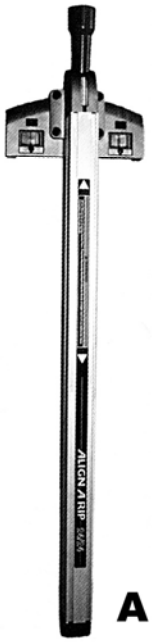

A

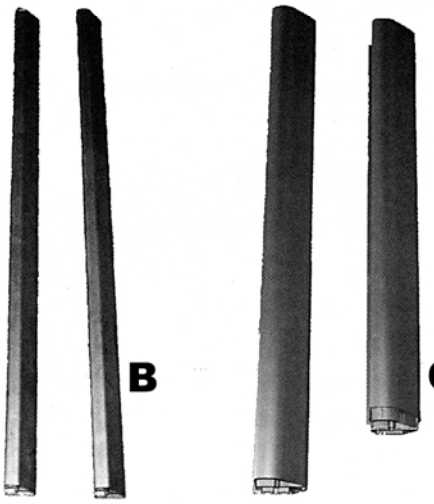

B C

UNPACKING AND ASSEMBLY

D.

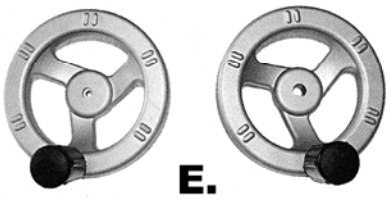

E.

F.

G.

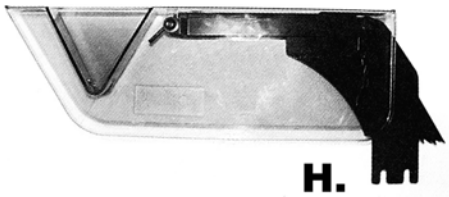

H.

MACHINE SPECIFICATIONS

Table dimensions	20 x 27 in
Table dimensions with extensions	44 x 27 in.
Saw blade size	10”
Saw blade speed	3450 RPM
Arbor size	5/8”
Maximum depth of cut at 90º	3 3/8”
Maximum depth of cut at 45º	2 1/2”
Right rip capacity	30”
Left rip capacity	12”
Max. width of dado	13/16”
Max. diameter of dado	8”
Main motor	2 HP, 220V, 1 Phase
Type	Induction
Drive type	Ribbed V-belt
Overload protection	Thermal
Net weight	253 lbs (115 kgs)
Gross weight	264 lbs (120 kgs)

MACHINE LEGEND

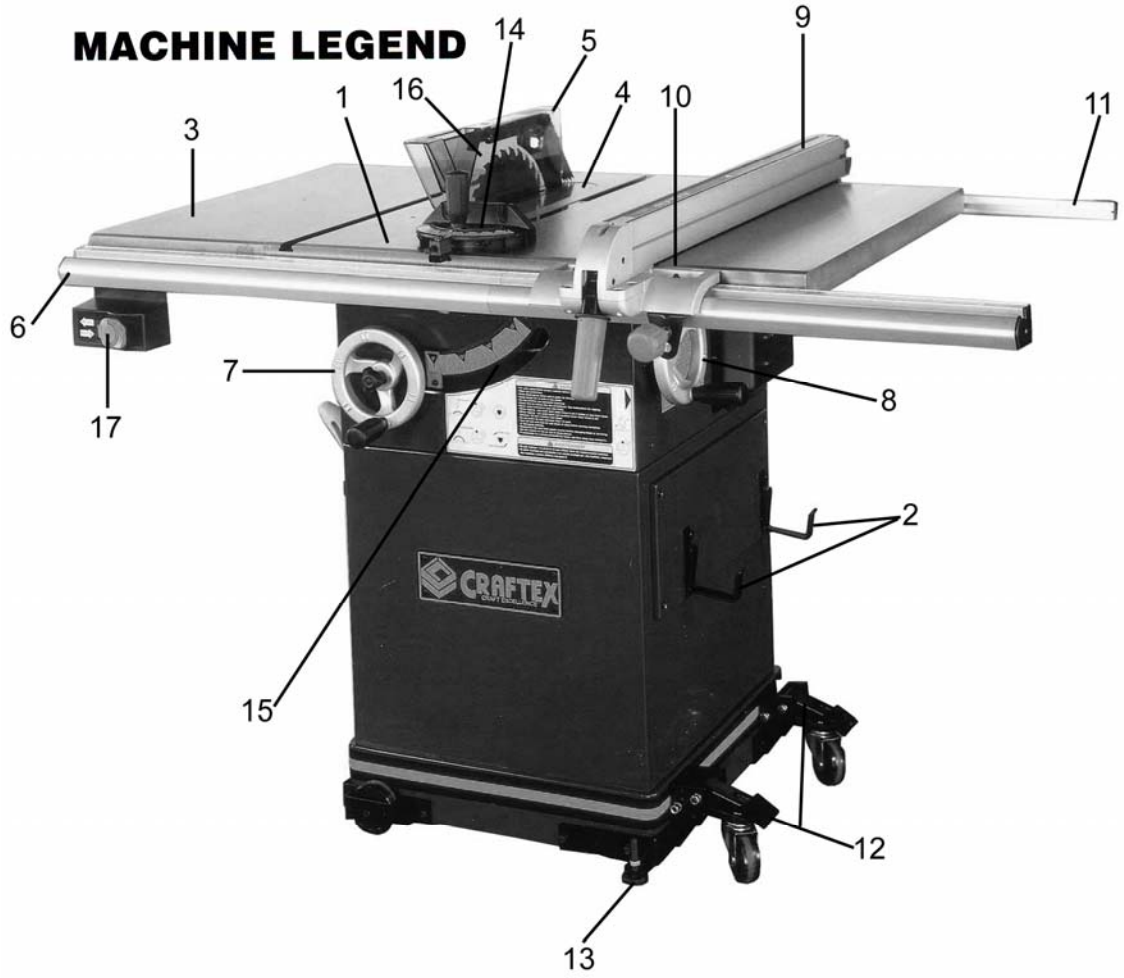

1. Main table
2. Fence mounting brackets
3. Left table extension
4. Throat plate
5. Blade guard and splitter assembly
6. Front rail
7. Saw blade raising handwheel
8. Saw blade tilting handwheel
9. Rip Fence
10. Optical Cursor
11. Rear rail
12. Mobile Base
13. Leveling feet
14. Miter gauge
15. Bevel scale
16. Saw blade
17. ON/OFF switch

ASSEMBLING

Please read the entire assembly section before proceeding Assemble the machine at the location in which it is to be used. Do not assemble the machine if any loose parts or fasteners are missing. In addition to the tools included with the machine, you will need to prepare the following: Cross head screwdriver, nut driver (8mm, 10mm, 12mm), hammer, combination square, adjustable wrench, and an angle square. You will also need a mild solvent cleaner such as mineral spirits, paint thinner, or denatured alcohol.

ASSEMBLE THE MOBILE BASE

The two roller feet are attached to the left side of the saw base using the bolts supplied.

The two elevating castors and leveling feet are attached to the right side of the saw base with the bolt in the package.

ATTACH THE TABLE EXTENSIONS

To attach the table extensions, you will need the following fasteners: 8 hex bolts, 8 spring washers

1. Align the table extensions with the table. Attach the table extensions to the table with a bolt and washer, with the bolt facing towards the machine body.
2. Attach spring washers to the bolts, and tighten them lightly with a wrench. Do not fully tighten the extensions to the table saw until they have been leveled with the table.
3. Place a straight edge over the table and extensions as shown in picture. Adjust the position of the extension so that it is parallel with the table. Use a wrench to tighten the bolts that fix the extension. Level both table extensions in this manner.

ATTACH THE RIGHT AND LEFT FRONT RAILS TO TABLE TOP

To install the front rails, you will need 6 square head bolts, 6 spring washers, 6 hex nuts, the front rail connector, rail end caps and screws for end caps.

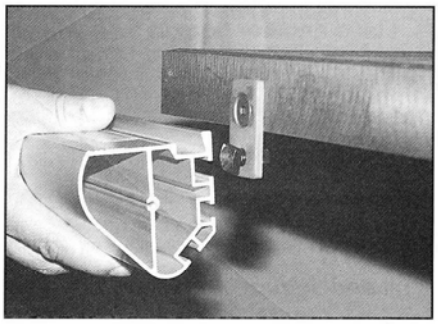

Insert six square head bolts into the table and extensions. Attach a spring washer and a hex nut to each bolt. Do not tighten the nuts. The backs of the front rails have slots which fit onto the square head bolts. The upper slot is for sliding onto the bolts. Slide the left and right front rails onto the bolts. Align the rails, and slide them together.

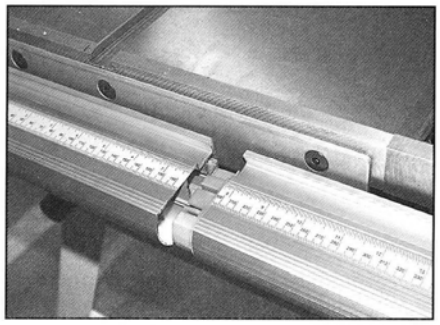

Insert the rail connector between the right and left front rail sections. Move the fence to touch the right side of blade. The gradation "0" on the scale attached on the front rail should align with the blade. Make pointer adjustment. Move the fence to touch the left side of the blade, and make pointer adjustment same as that on the right side of the blade. Tighten the nuts by hand to hold the rails in place. After the front rails are firmly attached to the table and table extensions, install the end caps for the front rails using one screw for each.

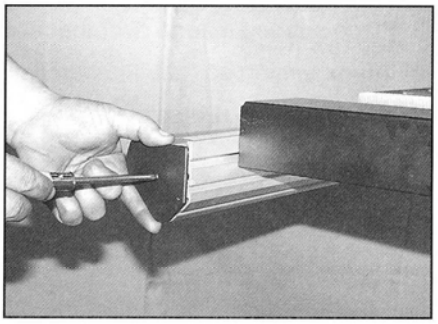

ATTACH THE REAR RAILS

To install the rear rails, your will need the following: 6 square head bolts, 6 hex nuts, 6 spring washers, rear rail connector, end caps for rear rail, and screws for end caps

From the rear of the saw, insert the square head bolts in the holes on the table and extensions. Under the table edge, attach the spring washers and hex nuts onto the bolts. Do not tighten the nuts. The rear rails have slots for sliding onto the square head bolts. Slide the left and right rear rails onto the square head bolts. Attach the rail connector to the two rails. Position the entire rear rail so that it approximately aligns with the front rail in length. Push the rail against the table and tighten the nuts that hold the rail. The rails should slide easily over the bolts. If they do not, realign the table extensions.

After the rear rails are firmly attached to the table and table extensions, install the end caps for the rear rails using one screw for each.

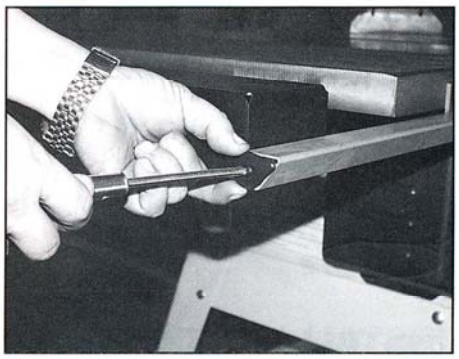

INSTALL MOTOR SWITCH

1. Insert the switch assembly onto the front rail with two screws and two square nuts. Insert the screws from the rear of the switch plate and add the square nuts to the front.
2. Slide the square nuts into the lower slot on the front rail.
3. Slide the switch to the desired working position, and tighten the two screws to fix it in place.
4. Install the paddle key on the switch as shown.

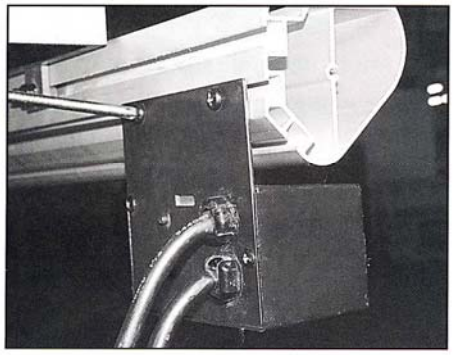

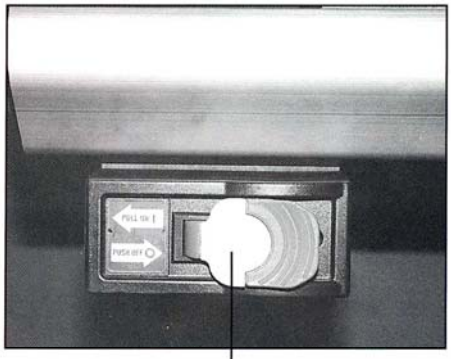

INSTALL THE GUARD AND SPLITTER ASSEMBLY

1) Remove the throat plate.

2) Lower the saw blade under the table surface by turning the saw blade elevating handwheel counterclockwise.

3) Loosen the guard outside lock nut properly so that the splitter can fit between the two guard fix plates.

4) Raise the saw blade to its highest position. Mount the splitter . Check to see if the splitter is aligned with the blade, and that the back edge of the splitter is perpendicular to the table surface. If not, adjust it by moving the inner nuts that tighten the guard.

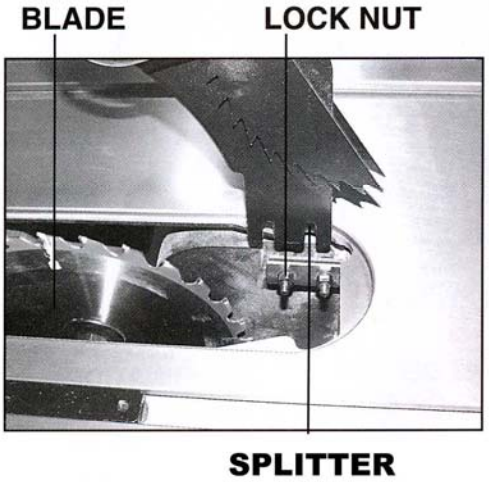

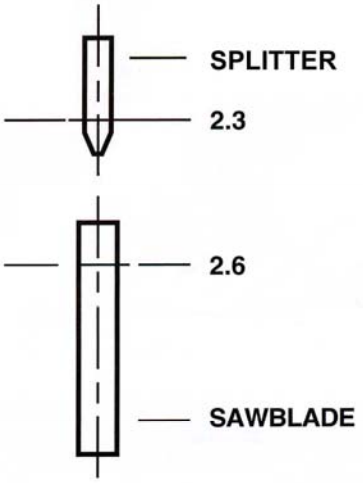

Adjust the splitter until both center lines are aligned

ADJUSTING THE THROAT PLATE

NOTE: The machine is factory adjusted at the time of manufacture, and should not require adjustment upon initial assembly. However, adjustment may be necessary due to effects of shipping and handling before unpacking. Make sure the machine is unplugged from the power source before making any adjustments.

To change the height of the throat plate, loosen the cross head screw at the front of the throat plate, and adjust the four set screws on the throat plate with a 2.5mm hex wrench. When properly adjusted, both the front and rear of the throat plate should be slightly below the table surface. Please note that the table insert must be in place and securely attached before the machine is operated.

ADJUSTING THE BEVEL STOPS

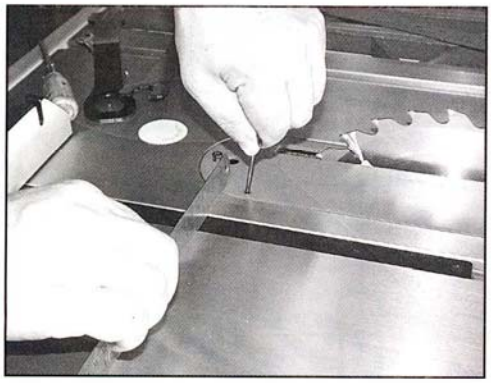

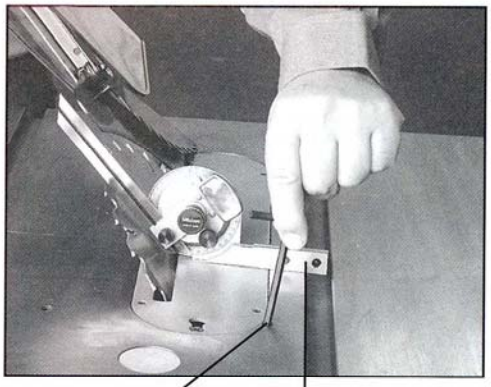

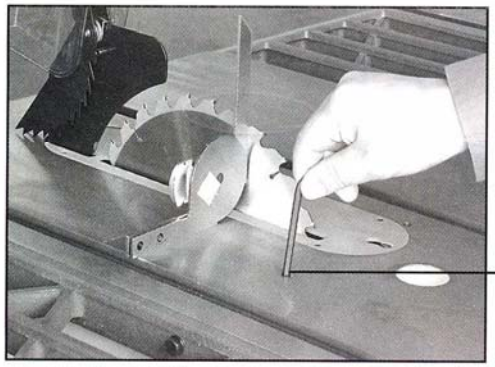

1. Make sure the machine is disconnected from the power source.

2. Loosen the bevel lock handle located under the table and turn the saw blade tilting handwheel clockwise until it stops.

3. Raise the blade to its highest position and lift the blade guard.

4. Check the angle of the blade with a combination square from the left side of the blade, keeping the square against the flat part of the blade. Do not touch the teeth or table insert.

5. If the blade angle is incorrect, Turn the 90° stop screw, which is located at the left of the blade, one full turn counterclockwise with a 4mm hex wrench.

6. Turn the handwheel until the blade is 90° to the table surface as indicated by the square.

7. Turn the 90° stop screw clockwise until slight resistance is felt. Do not over tighten the stop screw.

8. Check the 45° setting. Tilt the blade with the saw blade tilting handwheel as far as it will go to the left. Place the square against the blade, and do not let it contact the blade teeth. If the blade is not at 45°, unscrew the 45° stop screw, located to the right of the blade, and turn the handwheel one full turn clockwise. Then turn the handwheel counterclockwise until the blade is at 45°. Retighten the stop screw after adjustment is made.

ADJUST THE BEVEL POINTER

When the blade is at 90° to the table surface, the bevel pointer should read "0". If it does not, loosen the pointer screw with a cross head screwdriver. The screw can be accessed through the handwheel and the curved slot in front of the saw. Set the pointer to "0" and retighten the screw.

ADJUSTING THE MITER GAUGE

The miter gauge has positive stops at 0° and 45° left and right. To adjust these stops, loosen the lock nuts on the miter gauge indicators (on the bottom of the gauge), and move the adjusting screws as necessary. Check the gauge with a combination square, and retighten the lock nuts after adjustment is completed. To set the miter gauge past the 45° stops, pull out the stop pin located at the end of the gauge.

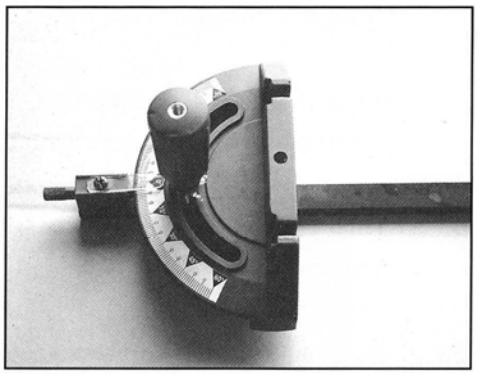

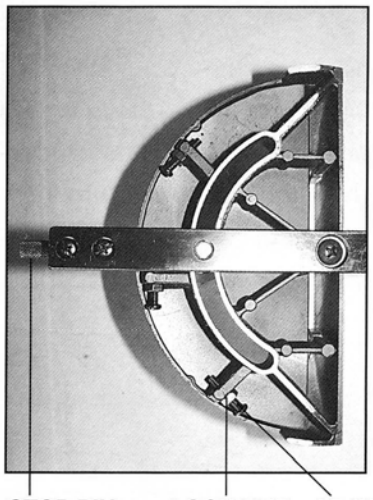

ADJUSTING AND USING THE RIP FENCE

CAUTION: The rip fence must be parallel to the blade during operation. Failure to set the rip fence parallel to the blade can result in kickback.

1. Disconnect the machine from the power source.

2. Raise blade to its highest position, and set it at 90° to the table surface.

3. Move the rip fence so that its edge touches against the saw blade.

4. Push down the cam lock lever to lock the fence in place.

5. If the fence is not parallel to the saw blade, then it needs to be adjusted. Release the cam lock lever and loosen the four 8mm alignment hex head bolts on the top of the fence, near the front.

6. Push the fence body and move the rear of the fence until it is parallel with the saw blade. Retighten the four alignment bolts and re-check the alignment.

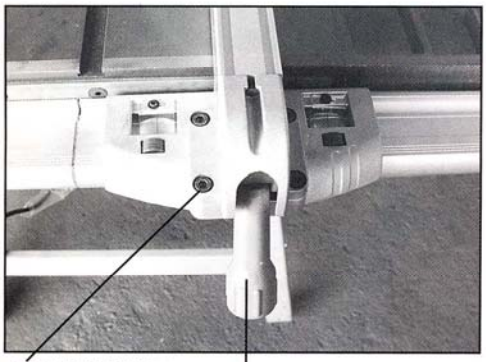

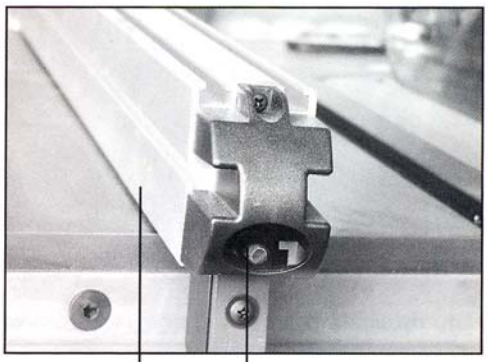

If the fence is slipping during operation, then the fence clamping tension needs to be adjusted.

1. Disconnect the machine from the power source.

2. Release the cam lock lever. Tighten the 8mm tensioning nut, located at the back of the fence. Be careful not to over-tighten the tensioning nut. The fence should still be able to slide easily on the table surface.

3. When a reasonable amount of force can be applied to the fence without it moving, then the tension is properly adjusted.

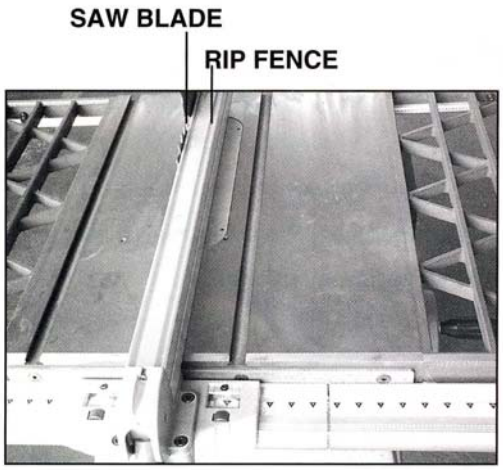

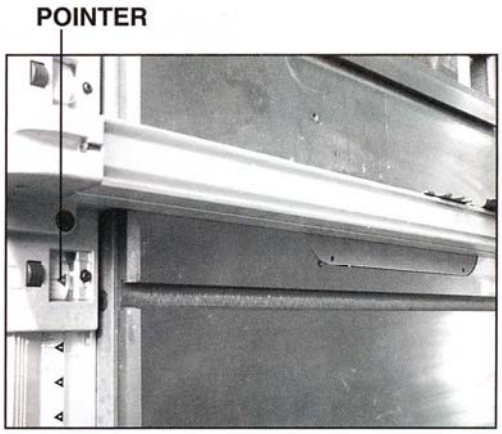

NOTE: To maintain the alignment of the rip fence, develop the habit of holding the front block on the fence against the rail while tightening the cam lock lever. Tighten the lock securely to prevent the fence from moving during operation.

The rip scale pointer will need to be readjusted when a thicker or thinner blade is installed. To readjust the pointer, loosen the cross head screw and slide the plastic piece to align the red mark. When making critical cuts, make a trial cut on scrap wood to ensure that the various scales and stops are correctly adjusted.

REPLACING THE SAW BLADE

1. Disconnect the machine from the power source.
2. Turn the saw blade raising handwheel to raise the blade approximately 20mm above the table surface.
3. Remove the throat plate by loosening the cross head screw at the front of the plate, and lifting the plate out.
4. Place one blade wrench onto the flats on the blade arbor. Place the other wrench onto the arbor nut. Remove the arbor nut and flange from the saw arbor by turning counterclockwise. Move the saw blade to its highest position and remove it.
5. Ensure that the spindle and washer are clean of dust and debris. Place the new saw blade onto the spindle, and make sure the blade teeth point down towards the front of the table. Put the washer and arbor nut on the spindle and tighten the arbor nut as much as possible by hand. Make sure that the saw blade is against the inner flange and the large washer diameter is against the blade.
6. Lower the blade and place one blade wrench onto the flats on the blade arbor. Place the other blade wrench onto the arbor nut. Tighten the arbor nut by turning it clockwise.
7. Different saw blades will make different sizes of kerf. Check the adjustment of the rip fence pointer and the blade guard splitter after changing blades.

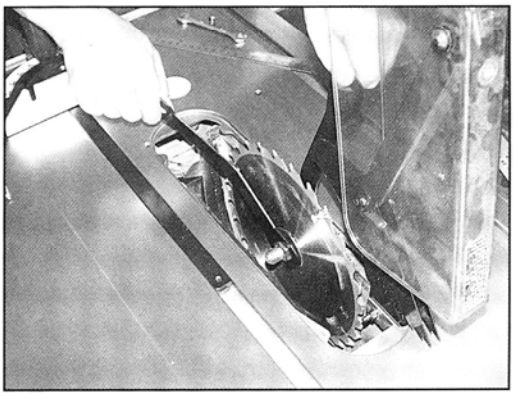

LEVELING THE SAW

The saw can be leveled by loosening the bolts on the leveling feet turning the upper bolt. Retighten the bolts after adjustment. If the saw becomes unstable when cutting exceptionally large or heavy workpieces, secure the saw to the floor. Remove the leveling feet and secure the table saw to the floor using appropriate screws or anchors as appropriate.

ON / OFF SWITCH

Pull out the switch paddle to turn the saw ON, and push it in to turn the saw OFF. The paddle switch can be removed to prevent unauthorized operation.

WARNING: Make sure the switch is in the OFF position before plugging in the table saw.

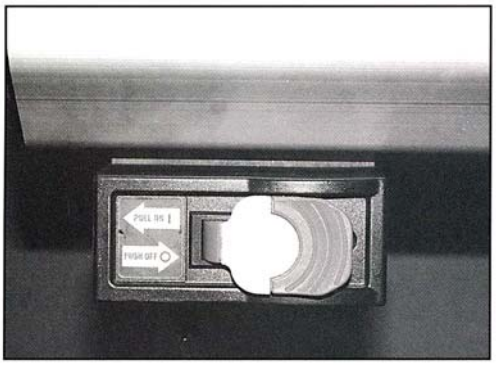

SAW BLADES

NOTE: This saw is intended for use with saw blades 10" in diameter or less.

1. The saw blade that is furnished with the machine is a 10" carbide tipped blade. It can be used for cross cutting and ripping. The center hole that fits on the arbor is 5/8" diameter.

2. There are many types of blade available to do specific cutting jobs, such as cross cut or rip only, or for use on hollow ground, thin plywood, paneling, etc. These blades produce finer finish work, and are more efficient and place less strain on the saw. Consider the use of specialty blades depending on your work.

3. Use only saw blades designed for maximum safe operating speeds of 6000 RPM or greater.

4. Saw blades should be kept sharp. It is recommended to use a reputable sharpening service to maintain your blades.

5. Never store saw blades by stacking them directly in contact with each other. Place a layer of cardboard or similar material between the blades to keep them from coming into contact.

OPERATION INSTRUCTIONS

The two basic kinds of cuts are cross cutting and ripping. In general, cutting with the grain is ripping and across the grain is cross cutting. However, with composite materials this distinction may be difficult to make, or not apply at all. In these cases, cutting the wood lengthwise is ripping, and across the shorter dimension is cross cutting. Do not perform either ripping or cross cutting freehand. Use the rip fence for ripping and the miter gauge for cross cutting

Before using the table saw, check the following:

1. Make sure the blade is tight.
2. Bevel angle and height lock knobs are tight.
3. If ripping, make sure the fence lock lever is tight and the fence is parallel to the blade.
4. If cross cutting, make sure the miter gauge is tight.
5. Make sure safety glasses are being worn.
6. Make sure the blade guard is properly attached and that the anti-kickback pawls are functioning.

   Failure to check these points can result in serious injury.

RIPPING

1. Lock the rip fence by pressing the fence lock lever down. Remove the miter gauge.

2. Raise the blade so that it is about 1/8" higher than the top of the workpiece.

3. Hold the workpiece flat on the table and against the fence. Keep the workpiece about 1" away from the blade.

4. Turn the saw on and allow the blade to come up to speed. Both hands can be used in starting the cut. When there is approximately 12" left to be ripped, use only one hand, with your thumb pushing the material, your index and second finger holding the material down and your other fingers hooked over the fence. Always keep your thumb along side your first two fingers near the fence.

5. Keeping the workpiece against the table and fence, slowly feed the workpiece rearward all the way through the saw blade. Continue pushing the workpiece until it is clear of the guard and it falls off the rear of the table. Do not overload the motor.

6. Never try to pull the workpiece back with the blade moving. Turn the switch off, wait for the blade to stop, raise the anti-kickback pawls if necessary and slide the workpiece out.

7. When sawing materials of great length or panels, always use a work support. A sawhorse, rollers, or outfeed assembly can provide adequate support for long workpieces. Make sure the work support is the same height as the saw table.

8. Never push or hold onto the "free" or" cut off" side of the workpiece.

BEVEL RIPPING

Bevel ripping is performed the same as ripping but with the saw blade set to an angle not perpendicular with the table surface. After changing the bevel angle, check the alignment of the guard and splitter, and make sure there is clearance with the saw blade.

RIPPING SMALL PIECES

Bevel ripping is performed the same as ripping but with the saw blade set to an angle not perpendicular with the table surface. After changing the bevel angle, check the alignment of the guard and splitter, and make sure there is clearance.
Any action that brings the operator's hands near the saw blade is hazardous. When a small width is to be ripped, use one or more push sticks to push the workpiece past the blade.th the saw blade.

CROSS CUTTING

1. Remove the rip fence and place the miter gauge in the slot on the table surface.

2. Adjust the blade height so that the blade is about 1/8" higher than the top of the workpiece.

3. Hold the workpiece firmly against the miter gauge with the path of the blade in line with the desired cut location. Keep the workpiece approximately 1" in front of the blade. Keep both hands away from the blade and out of the cutting line.

4. Start the saw motor and allow the blade to come up to speed.

5. Using both hands to keep the workpiece against the face of the miter gauge, and holding the workpiece flat on the table, slowly push the workpiece through the blade.

6. Never try to pull the workpiece back while the blade is still moving. Turn the switch off, allow the blade to stop, and carefully slide the workpiece out.

   CAUTION: Never touch or hold onto the "free" or cut off" end of the workpiece.

BEVEL CROSS CUTTING

This operation is the same as cross cutting except that the bevel angle is set to angle other than 0° After changing the bevel angle, check the alignment of the guard and splitter, and make sure there is clearance with the saw blade.

MITERING

This operation is the same as cross cutting, except the miter gauge is locked to an angle other than 0° Hold the workpiece firmly against the miter gauge and feed the workpiece slowly into the blade to prevent it from moving during cut.

COMPOUND MITERING

This is a combination of bevel cross cutting and mitering. It is infrequently used. Follow instructions for both bevel cross cutting and mitering.

DADO CUTTING

Caution: Do not attempt to stack dado blades thicker than 13/16". For any dado stack greater than 1/2", remove the outer washer and do not use. Place the dado stack on the spindle and tighten the arbor nut with the blade wrench. Do not use dado blades larger than 8"diameter.

Dado cuts require a special dado insert (not included).
Since dado cuts are not through cuts, the cuts must be performed with the blade guard removed. To remove the guard/splitter assembly, loosen the two nuts on the retaining plates and remove the assembly.

Any time a cut is required that is considerably wider than the saw kerf, a dado is used. A dado cut is commonly used to add support and line up for a shelf or cabinet. Since dado cuts require that the guard be removed, use extreme care when performing these cuts. If a deep cut is required, use several passes rather than making the full cutin one pass. Maximum dado width on this saw is 13/16". Do not use wider combinations.

CAUTION: Always check dado blade clearance before plugging in the saw. Always reattach the guard and adjust after the dado cut is finished.

WARNING: Before connecting the table saw to the power source, inspect the guard and splitter for proper alignment and clearance with the saw blade. Check alignment after each change of bevel angle.

DUST COLLECTION

Your saw table is equipped with a dust chute with a dust collection port at the boottom of the saw.
After extended use, the saw's dust collection system may become clogged. To clear the dust collection system:
1. Unplug the saw.
2. Use a paint stick or long screwdriver to loosen debris and cut-offs and push them through the port.

When cutting wet wood without a dust collector, making long narrow cut-offs or when cutting with a dado blade, clean the dust collection port after each use if not using a dust collector.

MAINTENANCE AND LUBRICATION

Use only mild soap and damp cloth to clean the tool. Do not allow liquid to enter the machine. Do not immerse any part of the table saw in liquid.

Keep the table surface free of rust. Treat rust spots immediately.

To lubricate the table saw, first use a stiff brush to clean any dust and debris from the gears and worms. Remove any pitch or resin that has accumulated. Use a light solvent if necessary. Apply grease to the gears shown in figure. Paste wax can also be used if the grease is attracting too much dust. Keep all spray lubricants away from the upper guard. After long term use, the saw table mechanisms may require lubrication.

For maximum safety and reliability, repairs and maintenance should be performed at an authorized service center.

MAINTAINING THE RIP FENCE

The rip fence should always slide freely. If it requires excessive force to slide it, or if it feels rough, wipe the rails and fence head gliding surface with a cloth. Check the movement again. If it is still rough, clean the fence head with a mild solvent. Coat the rail with a heavy coat of paste wax or a light oil. Slide the fence back and forth several times to coat the rail and fence. Wipe off any excess wax or oil from the rail. If the fence still does not move freely, adjust the fence tension.

TROUBLESHOOTING

TROUBLE	PROBABLE CAUSE	CORRECTION
Saw does not start.	1. Switch is damaged.	1. Have switch replaced by authorized dealer.
Motor runs slow.	1. Windings are burned out or open. 2. Start switch is damaged. 3. Circuit is overloaded. Incorrect wiring.	1. Have the motor repaired at an authorized dealer. 2. Have the switch replaced. 3. Do not use other appliances or tools on the same circuit. Check the wiring of the saw and source voltage.
Motor overheats.	1. Motor is overloaded. 2. Blade is too dull. 3. Sawdust not flowing out.	1. Check the voltage. 2. Replace the blade. 3. Clean dust from machine, ensure dust removal system is working properly.
Saw vibrates excessively.	1. Belt is damaged. 2. Saw is mounted incorrectly. 3. Work surface is uneven.	1. Replace the belt. 2. Tighten all hardware. 3. Make sure saw is on flat surface. Adjust leveling as necessary.
Rip fence does not move smoothly.	1. Rip fence is not mounted correctly. 2. Rails are not clean.	1. Remove the rip fence and re-attach it, making sure it is positioned correctly. 2. Clean and wax the rails.
Miter gauge does not move smoothly	1. Miter gauge is not clean.	1. Clean the miter gauge, wax the base and sides.

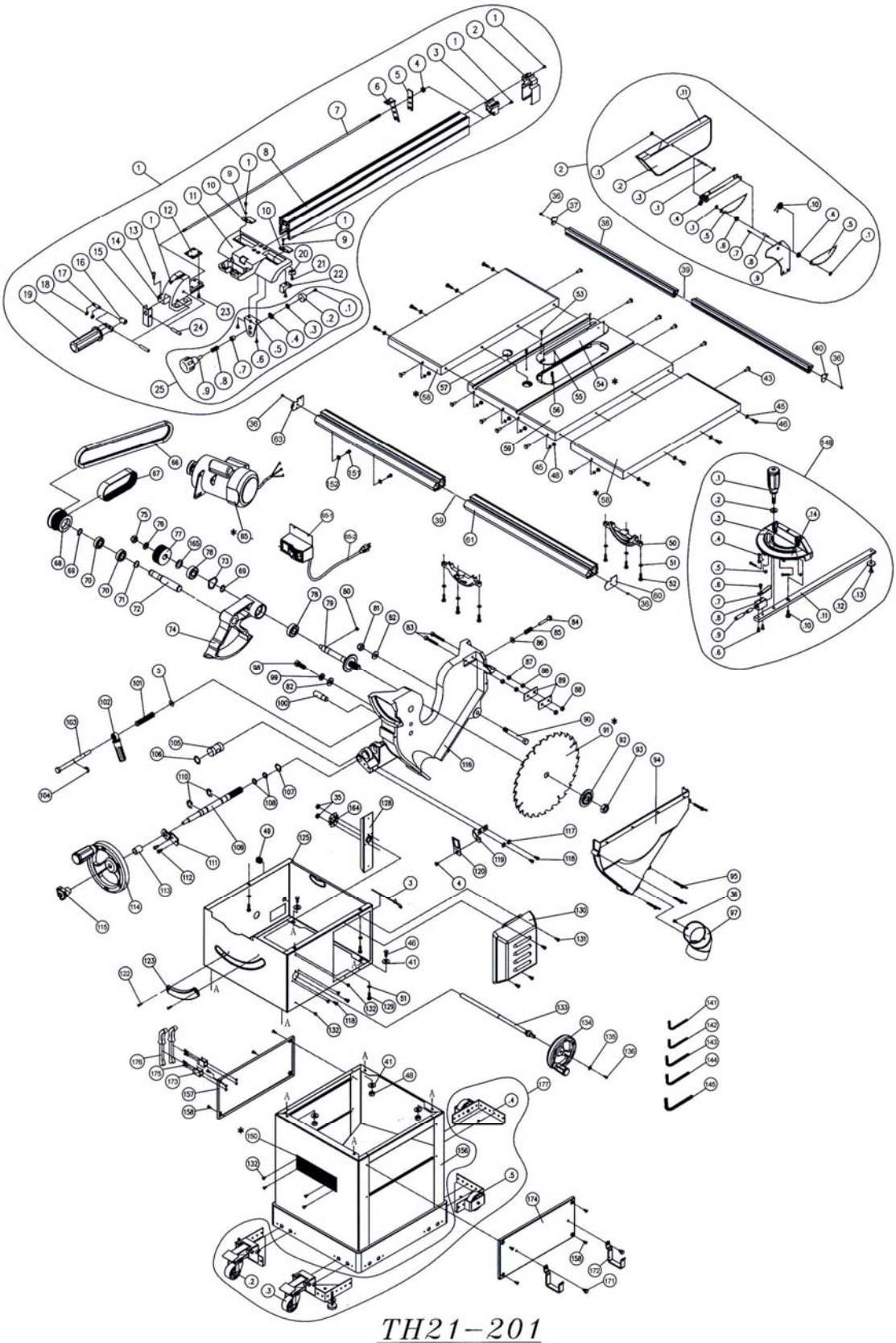

TH21–201

CT104 PARTS LIST

MODEL NO.	DESCRIPTIO	
1	FENCE (PCT104FEN)	3
1-1	5/32" X 1/2" SCREW	12
1-2	BACK COVER	3
1-3	PROTECTION COVER	3
1-4	1/4"-20NC(11B X 8H) NUT	12
1-5	CONNET PLATE	6
1-6	LOCK PLATE	6
1-7	ROD	3
1-8	RAIL	2
1-9	4.3 X 10 X 1.0T WASHER	12
1-10	INDEX	6
1-11	SLIDE BASE	3
1-12	LOCK PLATE	6
1-13	5/16"-18NC X 1/2" CAP SCREW	12
1-14	SLIDE BASE	3
1-15	ROD PLATE	3
1-16	SLEEVE	3
1-17	SPINDLE	3
1-18	ETW-6 E-RING	12
1-19	STOP-HANDLE	6
1-20	SPACER	6
1-21	5/32" X 1/4" SCREW	12
1-22	SPACER	12
1-23	1/4"-20NC X 3/4" CAP SCREW	12
1-24	8 X 43 SPRING PIN	12
1-25-1	3/16"-24NC X 3/8" WASHER	12
1-25-2	RING	12
1-25-3	5 X 24 X 1.2T WASHER	12
1-25-4	SPN-12 SPN RING	12
1-25-5	75 SUPPORTER	6
1-25-6	1/4"-20NC X 3/8" SCREW	12
1-25-7	SHIFT	6
1-25-8	SPRING	3
1-25-9	HANDLE	12
2-1	SPN-6 SPN RING	12
2-2	BLADE COVER	6
2-3	PIN	12
2-4	CONNECT PLATE	6
2-5	STOP TEETH PLATE	6
2-6	LOCK SLEEVE	6
2-7	SPRING PIN	12
2-8	PIN	12
2-9	RIVE PLATE	12
2-10	SPRING	12
2-11	STICKER	6

CT104 PARTS LIST

3	CHAIN	3
4	M4 X 0.7P X 8/4 X 10 X 0.8T WASHER	12
5	8.2 X 22 X 3.0T WASHER	12
35	M5 X 0.8P (8B X 4H) NUT	12
36	M4 X 1.59P X 10 SCREW	12
37	L-RAIL COVER (BACK)	3
38	RAIL	2
39	KEY	12
40	R-RAIL COVER (BACK)	6
41	8.5 X 16 X 2.0T WASHER	12
43	SCREW	12
45	SPRING WASHER	12
46	SCREW	12
48	M8 X 1.25P (13B X 6.5H) NUT	12
49	STRAIN RELIEF	6
50	SUPPORT BASE	6
51	8.4 X 15 (BW-8) WASHER	12
52	M8 X 1.25P SCREW	12
53	M5 X 0.8P X 20 SCREW	12
54	COVER	3
55	M5 X 0.8P X 5 SCREW	12
56	M8 X 1.25P X 20 SCREW	12
57	PLATE	6
58	EXT. WING	4
59	WORKING TABLE	1
60	R-RAIL COVER (FRONT)	6
61	RAIL	3
63	L-RAIL COVER (FRONT)	6
65	MOTOR (CT104MOT)	3
65-1	MOTOR 1.5HP 220-240V X 60HZ X 1PH X 2P	
65-2	POWER CORD 14AWG X 3C X 1820mm	2
65-1	SWITCH	3
66	735LI-13X V-BELT	12
67	125J-9 J-BELT	12
68	PULLY	6
69	STW-15 S-RING	12
70	6002-2NSE BEARING	6
71	STW-17 S-RING	12
72	SHIFT	6
73	BWW-6202 WASHER	6
74	GEAR (Bracket)	3
75	M10 X 1.25P (17B X 12H) NUT	12
76	10.5 X 28 X 3.0T WASHER	12
77	PULLY	6
78	6202-2NSE BEARING	6
79	ARBOR	12

CT104 PARTS LIST

80	5 X 5 X 8 KEY	6
81	M10 X 1.5P (17B X 12H) WASHER	12
82	10.3 X 22 X 2.0T WASHER	12
83	M6 X 1.0P X 40 CAP SCREW	12
84	M6 X 1.0P X 40 WASHER	12
85	SPRING	6
86	6.4 X 16 X 1.0T WASHER	12
87	M6 X 1.0P (10B X 5H) NUT	12
88	M6 X 1.0P (10B X 7H) NUT	12
89	SPACE PLATE	6
90	M10 X 1.5P X 80 SCREW	12
91	SAW BLADE	
92	WASHER	12
93	TW5/8"-12 NUT	12
94	DUST COVER	3
95	M5 X 0.8P X30 SCREW	12
97	DUST OUT BET	6
98	M10 X 1.5P X 25 SCREW	12
99	10.2 X 18.5 WASHER	12
100	SHIFT	3
101	SPRING	6
102	HANDLE	6
103	SHIFT	12
104	E-RING	6
105	SHIFT	6
106	WASHER	12
107	WASHER WW-16	12
108	O-RING	12
109	SCREW ROD	3
110	C-RING	12
111	LOCK PLATE	6
112	M5 X 0.8P X 10 CAP SCREW	12
113	SPACER	12
114	HAND WHEEL	3
115	LOCK KNOB	6
116	BASE	3
117	5.3 X 12 X 1.0T WASHER	12
118	M5 X 0.8P X 10 SCREW	12
119	INDEX HOLDER	3
120	INDEX	3
122	M4 X 0.7P X12 SCREW	12
123	ANGLE STICKER	6
125	MACHINE BODY	1
128	HOLDER PLATE	3
129	M8 X 1.25P X 16 SCREW	12

CT104 PARTS LIST

130	COVER	6
131	M4 X 0.7P X 10 SCREW	12
132	M5 X 2.12P X8 SCREW	12
133	SCREW ROD	6
134	HAND WHEEL	6
135	WASHER	12
136	SCREW	12
148-1	HANDLE	6
148-2	WASHER	6
148-3	GAUGE BODY	6
148-4	M4 X 0.7P X20 SCREW	12
148-5	M4 X 0.7P(7B X 3.2H) NUT	12
148-6	M5 X 0.8P X 10 SCREW	12
148-7	INDEX	6
148-8	SPACER	6
148-9	ROD	6
148-10	SCREW	12
148-11	SET PLATE	6
148-12	SLOT PLATE	6
148-13	SCREW	12
148-14	STICKER	6
151	M6 X 1.0P X10 SCREW	12
152	M6 X 1.0P (10B X 5H) NUT	12
156	STAND	
157	L-SIDE COVER	2
158	SCREW	12
164	LOCK BASE	3
165	WASHER	12
171	M8 X 1.25P X 12(13B X 6.5H) WASHER	12
172	SLIDE SUPPORTER	6
173	SUPPORT	3
174	R-SIDE COVER	3
175	SCREW	12
176	PUSH STICKER	
177	MOBILE BASE SET	
177-1	L-WHEEL	3
177-2	R-WHEER	3
177-3	L-BACK WHEEL	3
177-4	R-BACK WHEEL	3

CRAFTEX 2 YEAR LIMITED WARRANTY

Craftex warrants every product to be free from defects in materials and agrees to correct such defects where applicable. This warranty covers **two years** for parts and 90 days for labour (unless specified otherwise), to the original purchaser from the date of purchase but does not apply to malfunctions arising directly or indirectly from misuse, abuse, improper installation or assembly, negligence, accidents, repairs or alterations or lack of maintenance.
Proof of purchase is necessary.
All warranty claims are subject to inspection of such products or part thereof and Craftex reserves the right to inspect any returned item before a refund or replacement may be issued.
This warranty shall not apply to consumable products such as blades, bits, belts, cutters, chisels, punches etceteras.
Craftex shall in no event be liable for injuries, accidental or otherwise, death to persons or damage to property or for incidental contingent, special or consequential damages arising from the use of our products.

RETURNS, REPAIRS AND REPLACEMENTS

To return, repair, or replace a Craftex product, you must visit the appropriate Busy Bee Tools showroom or call 1-800-461-BUSY. Craftex is a brand of equipment that is exclusive to Busy Bee Tools.
For replacement parts directly from Busy Bee Tools, for this machine, please call 1-800-461-BUSY (2879), and have your credit card and part number handy.

- All returned merchandise will be subject to a minimum charge of 15% for re-stocking and handling with the following qualifications.
- Returns must be pre-authorized by us in writing.
- We do not accept *collect* shipments.
- Items returned for warranty purposes must be insured and shipped pre-paid to the nearest warehouse
- Returns must be accompanied with a copy of your original invoice as proof of purchase. Returns must be in an un-used condition and shipped in their original packaging a letter explaining your reason for the return. Incurred shipping and handling charges are not refundable.
- Busy Bee will repair or replace the item at our discretion and subject to our inspection.
- Repaired or replaced items will be returned to you pre-paid by our choice of carriers.
- Busy Bee reserves the right to refuse reimbursement or repairs or replacement if a third party without our prior authorization has carried out repairs to the item.
- Repairs made by Busy Bee are warranted for 30 days on parts and labour.
- Any unforeseen repair charges will be reported to you for acceptance prior to making the repairs.
- The Busy Bee Parts & Service Departments are fully equipped to do repairs on all products purchased from us with the exception of some products that require the return to their authorized repair depots. A Busy Bee representative will provide you with the necessary information to have this done.
- For faster service it is advisable to contact the nearest Busy Bee location for parts availability prior to bringing your product in for repairs.