CX706
10” x 22” METAL LATHE WITH DIGITAL READOUT
USER MANUAL

COPYRIGHT © 2014 BY CRAFTEX INDUSTRIES INC. NO PORTION OF THIS MANUAL MAY BE PRODUCED WITHOUT THE WRITTEN CONSENT OF CRAFTEX INDUSTRIES INC.

Version 2.0

TABLE OF CONTENTS

General Safety Instructions for Machines 2
CX706 Specific Safety Instructions 3
Features 4
Tool Box Contents 5
Unpacking and Cleanup 6

GENERAL DESCRIPTION 7
Lathe Bed 7
Headstock 7
Gearbox 7
Carriage 7
Apron 8
Leadscrew 8
Tailstock 8

CONTROLS 9
Emergency Stop ON/OFF Button 9
Change-Over Switch 9
Variable Speed Control Switch 9
Feed Direction Control Switch 9
Feed Direction Selector 9
Feed Rate Selector 9
Compound Rest Lock 9
Compound Slide Lock 9
Cross Slide Lock 9
Carriage Lock 10
Longitudinal Travel 10
Half Nut Engage Lever 10
Cross Travel Handwheel 10
Compound Rest Travel Lever 10
Tool Post Clamping Lever 10
Cross/Longitudinal Power Feed Lever 10
Tailstock Clamping Handle 10
Tailstock Quill Clamping Lever 10
Tailstock Quill Travel Handwheel 10
Tailstock Off-set Adjustment 10

OPERATIONS 11
Chuck Replacement 11
Tool Setup 11
Changing to High/Low Speed 11
Belt Adjustment 11
Manual Turning 12

Longitudinal Turning with Auto-Feed 12
Change Gears Replacement 12
Threading and Feeding Table for Lathe 13
Straight Turning 14
Facing and Recesses 14
Turning Between Centers 14
Taper Turning Using Tailstock Offset 14
Taper Turning by Setting the Top Slide 15
Thread Cutting 15

LATHE ACCESSORIES 16
Three Jaw Universal Lathe Chuck 16
Four Jaw Independent Lathe Chuck 16
Drill Chuck (Optional) 16
Morse Taper Arbor (Optional) 16
Live Center (Optional) 16
Steady Rest 17
Follow Rest 17

ADJUSTMENTS 18
Main Spindle Bearings 18
Adjustment of Cross Slide 18
Adjustment of Top Slide 18
Adjustment of Half Nut Guide 18

LUBRICATION 19
Gearbox 19
Change Gear 19
Carriage 19
Top Slide 19
Cross Slide 19
Apron 19
Leadscrew 20
Tailstock 20

ELECTRICAL DIAGRAM 20
MAINTENANCE 21
TROUBLESHOOTING 22

PARTS DIAGRAM AND LIST 23
Headstock Assembly 23
Gearbox Assembly 25
Carriage, Tool Post & Cross Slide Assembly 27
Apron Assembly 30
Tailstock & Bed Assembly 33
Electrical Box Assembly 36
Quadrant Assembly 38

WARRANTY 40

GENERAL SAFETY INSTRUCTIONS
FOR MACHINES

Extreme caution should be used when operating all power tools. Know your power tool, be familiar with its operation, read through the user manual and practice safe usage procedures at all times.

- **ALWAYS** read and understand the user manual before operating the machine.
- **CONNECT** your machine ONLY to the matched and specific power source.
- **ALWAYS** wear safety glasses respirators, hearing protection and safety shoes, when operating your machine.
- **DO NOT** wear loose clothing or jewelry when operating your machine.
- **A SAFE ENVIRONMENT** is important. Keep the area free of dust, dirt and other debris in the immediate vicinity of your machine.
- **BE ALERT! DO NOT** use prescription or other drugs that may affect your ability or judgment to safely operate your machine.
- **DISCONNECT** the power source when changing drill bits, hollow chisels, router bits, shaper heads, blades, knives or making other adjustments or repairs.
- **NEVER** leave a tool unattended while it is in operation.
- **NEVER** reach over the machine when the tool is in operation.
- **ALWAYS** keep blades, knives and bits sharpened and properly aligned.
- **ALL OPERATIONS MUST BE** performed with the guards in place to ensure safety.
- **ALWAYS** use push sticks and feather boards to safely feed your work through the machine and clamp the work-piece (when necessary) to prevent the work-piece from any unexpected movement.
- **ALWAYS** make sure that any tools used for adjustments are removed before operating the machine.
- **ALWAYS** keep the bystanders safely away while the machine is in operation.
- **NEVER** attempt to remove jammed cutoff pieces until the saw blade has come to a full stop.

CX706 - METAL LATHE
SPECIFIC SAFETY INSTRUCTIONS

- **This machine is designed and intended for use by properly trained and experienced personnel only.** If you are not familiar with the proper use of lathes, do not use this machine until proper training and knowledge has been obtained.

- **Keep guards in place.** Safety guards must be kept in place and in working order all the times to ensure safety.

- **Keep children and visitors away.** All children and visitors should be kept at a safe distance from the work area.

- **Wear proper apparel.** Loose clothing, gloves, neckties, rings, bracelets, or other jewelry may get caught in moving parts. Non-slip footwear is recommended. Wear protective hair covering to contain long hair. Do not wear any type of gloves.

- **Always use safety glasses.** For the safety of your eyes, safety glasses should be used while operating the lathe.

- **Do not use the lathe in dangerous environments.** Do no expose the machine to rain. Do not use the machine in wet locations.

- **Check for damaged parts.** Check for proper alignment of moving parts, broken parts, and any other conditions that may effect the tools operation.

- **Remove adjusting keys and wrenches.** Remove all the tools used for adjustment before turning the machine on.

- **Be careful.** Do not put your hand close to the cutter while the machine is running.

- **Never leave the lathe** unattended while it is running.

- **Do not over-reach.** Keep proper footing and balance at all times.

- **Maintain tools with care.** Keep tools sharp and clean for best and safest performance. Follow instructions given in the manual for lubrication and replacing accessories.

- **Turn the power OFF.** Before making any adjustments, make sure the switch is in the “OFF” position and the cord is un-plugged from the power outlet.

- **Make sure** you have read and understood all the safety instructions in the manual and you are familiar with your metal lathe, before operating it. If you fail to do so, serious injury could occur.

WARNING

The safety instructions given above can not be complete because the environment in every shop is different. Always consider safety first as it applies to your individual working conditions.

CX706 – METAL LATHE

FEATURES

MODEL CX706 – 10” x 22” METAL LATHE WITH VARIABLE SPEED

As part of the growing line of Craftex CX-Series metalworking equipment, we are proud to offer the CX706, a 10" x 22" Metal Lathe with Variable Speed. By following the instructions and procedures laid out in this user manual, you will receive years of excellent service and satisfaction. The CX706 is a professional tool and like all power tools, proper care and safety procedures should be adhered to.

- Motor.....1 HP
- Swing Over Bed.....10” (250mm)
- Swing Over Cross Slide..... 6” (152 mm)
- Distance Between Centers .....21-3/4” (550mm)
- Width of Bed .....5-5/16” (135mm)
- Hole Through Spindle .....1” (25mm)
- Spindle Nose Taper MT4
- Number of Spindle Speeds .....Variable
- Range of Spindle Speeds .....50 - 2000 RPM
- Number of Metric Threads 21
- Range of Metric Threads .....0.35mm – 3mm
- Number of Imperial Threads & Range...37/8-80 T.P.I
- Range of Cross Feed..... 0.0014” - 0.004”
- Range of Longitudinal Feed..... 0.0025” - 0.014”
- Tool Post Type.....4-Way
- Max Compound Slide Travel.....3” (80mm)
- Max Cross Slide Travel.....4-1/2” (110mm)
- Maximum Carriage Travel.....17-3/4” (187mm)
- Tailstock Spindle Travel.....3” (76mm)
- Taper in Tailstock Spindle.....MT2
- Overall Dimension of the lathe.....Length 45-1/3” x Width 22” x Height 22”
- Weight.....319 lbs (145 kgs)
- Warranty 3-Years

CONTENTS OF SHIPPING CONTAINER (not shown in figure 01)

CX706 Lathe
Test Flow Chart
Toolbox
Steady Rest
Follow Rest
Facce Plate
3 Jaw Chuck
4 Jaw Chuck

WARNING!

Read and understand the entire contents of this manual before attempting to setup or operate the machine. Failure to do so could result in serious personal injury and damage to the machine.

TOOLBOX CONTENTS (Fig. 1)

Dead Center MT4
Dead Center MT2
External Jaw for 3 Jaw Chuck
Oil Bottle
Philips Screwdriver
Flat Screwdriver
Key for 3-Jaw Chuck
Hex Socket Wrenchs
Double End Head Wrenchs
Change Gears

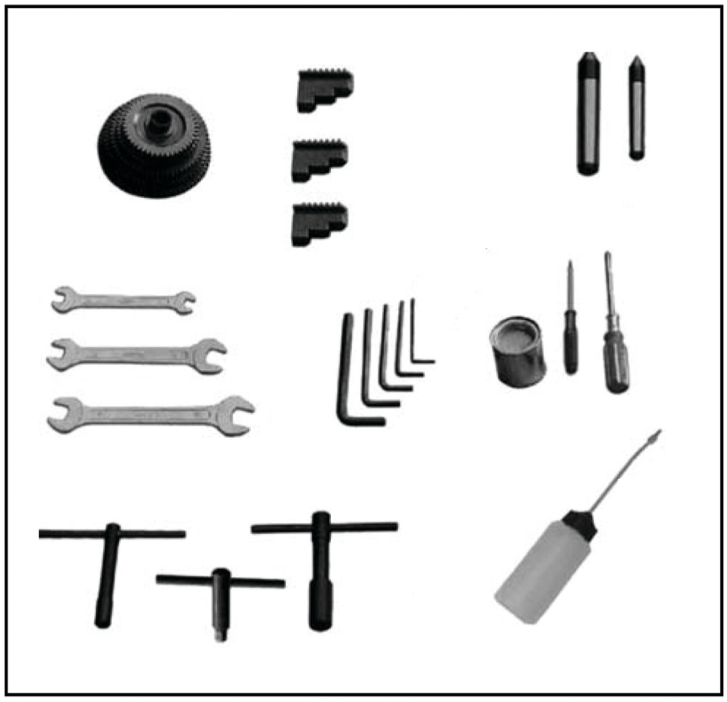

UNPACKING AND CLEAN-UP

1. Remove the wooden crate.
2. Check all the machine accessories according to the packing list.
3. Unbolt the lathe from the shipping crate bottom.
4. Choose a location for the lathe that is dry, has good lighting and has enough room to be able to service the lathe on all four sides.
5. With adequate lifting equipment, slowly raise the lathe off the shipping crate bottom. **Do not lift by spindle**. Make sure lathe is balanced before moving to sturdy bench or stand.
6. To avoid twisting the bed, the lathe's location must be absolutely flat and level. Bolt the lathe to the stand (if used). If using a bench, through bolt for best performance.
7. Clean all rust protected surfaces using a mild commercial solvent, kerosene or diesel fuel. Do not use paint thinner, gasoline or lacquer thinner. These will damage painted surfaces. Cover all cleaned surfaces with a light film of 20W machine oil.
8. Remove the end gear cover. Clean all components of the quadrant assembly and coat all gears with a heavy, non-slinging grease.

FOUNDATION DRAWING

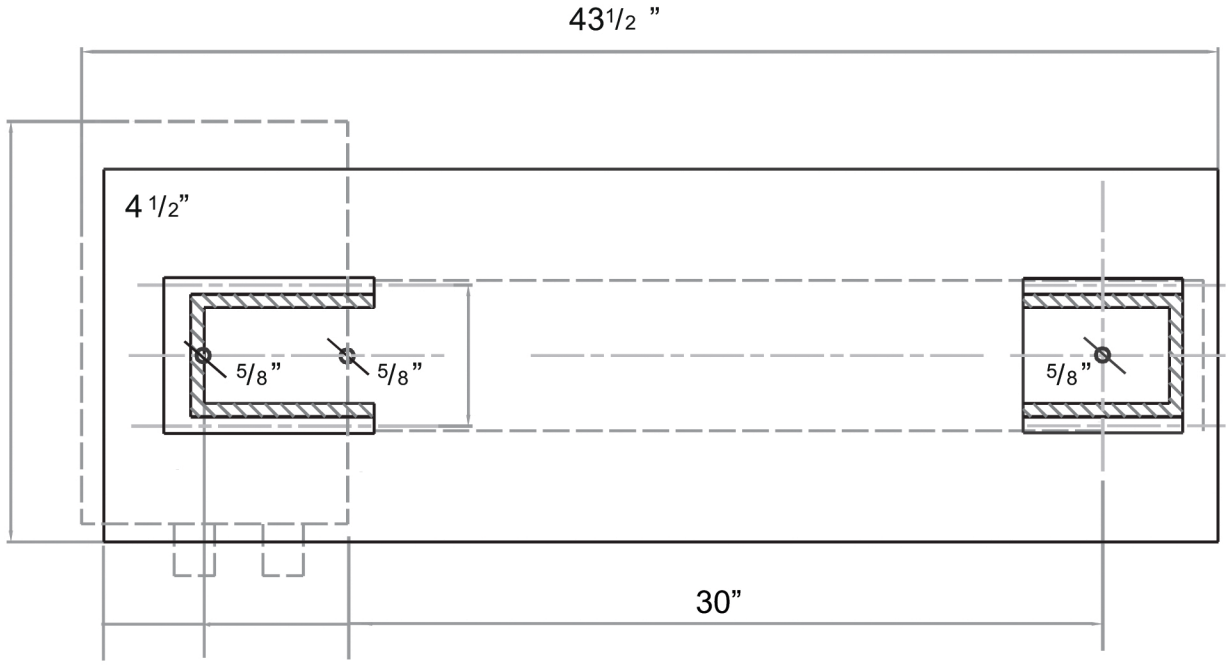

Fig. 2

GENERAL DESCRIPTION

Lathe Bed (Fig. 3)

The lathe bed is made of high-grade iron. By combining high cheeks with strong cross ribs, a bed of low vibration and rigidity is produced. It integrates the headstock and drive unit, for attaching the carriage and leadscrew. The two precision-ground V – sideways, re-enforced by heat hardening and grinding, are accurate guide for the carriage and tailstock. The main motor is mounted to the rear of the left side of the bed.

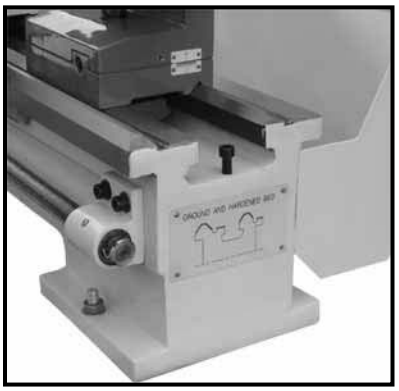

Fig. 3

Headstock (Fig. 4)

The headstock is cast from high grade, low vibration cast iron. It is bolted to the bed with four screws. The headstock houses the main spindle with two precision taper roller bearings and the drive unit.
The main spindle transmits the torque during the turning process. It also holds the workpieces and clamping devices. (e.g. 3-jaw chuck).

Fig. 4

Gear Box (Fig. 5)

The gear box is made from high quality cast iron and is mounted on the left side of the machine bed. It is to select the feeds for straight turning as well as for thread cutting. In order to achieve certain thread pitches, it is necessary reconfigure according to the gear chart.

The torque of the work spindle is transmitted to the feed gear and thus to the leadscrew.

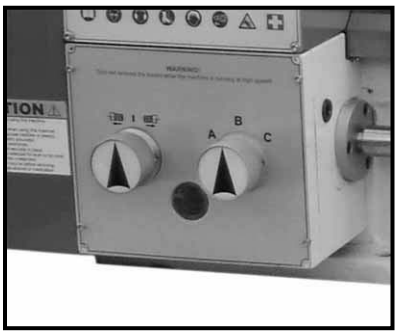

Fig. 5

Carriage (Fig. 6)

The carriage is made from high quality cast iron. The slide parts are smoothly ground. They fit the V on the bed without play. The lower sliding parts can be easily and simply adjusted. The cross slide is mounted on the carriage and moves on a dove tailed slide. Play in the cross slide is eliminated by the gibs.

Move the cross slide with its conveniently positioned handwheel. There is a graduated collar on the handwheel.

The top slide, mounted on the cross slide, can be rotated 360º. The top slide and the cross slide travel is dove -tail slides and have gibs, adjustable nuts, and graduated collars.

A four way tool post is fitted on the top slide and allows four tools to be clamped. Loosen the center clamp handle to rotate any of the four tools into position.

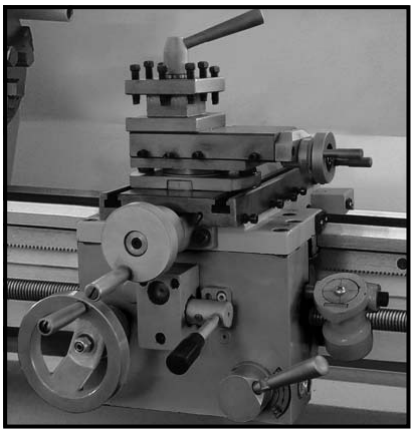

Fig. 6

Apron (Fig. 7)

The apron is mounted on the bed. It houses the half nut with an engaging lever for activating the automatic feed. The half nut gibs can be adjusted from the outside.

A rack, mounted on the bed, and a pinion operated by the handwheel on the carriage allow for quick travel of the apron.

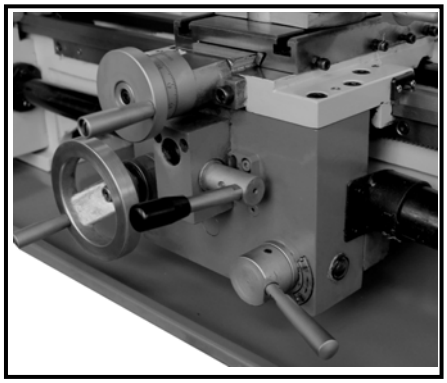

Fig. 7

Leadscrew (Fig. 8)

The leadscrew is mounted on the front of the machine bed. It is connected to the gear box at the left for automatic feed and is supported by bearings on both ends. The two grooved nuts (A, Fig. 9) on the right end are designed to take up play on the leadscrew.

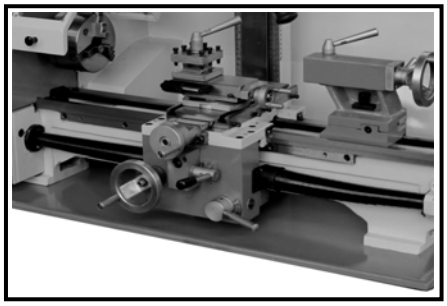

Fig. 8

Tailstock (Fig. 10)

The tailstock slides on a V-way and can be secured at any location. The tailstock has a heavy-duty spindle with a Morse taper No. 2 socket and a graduated scale. The spindle can be secured at any location with a clamping lever. The spindle is moved with a handwheel at the end of the tailstock.

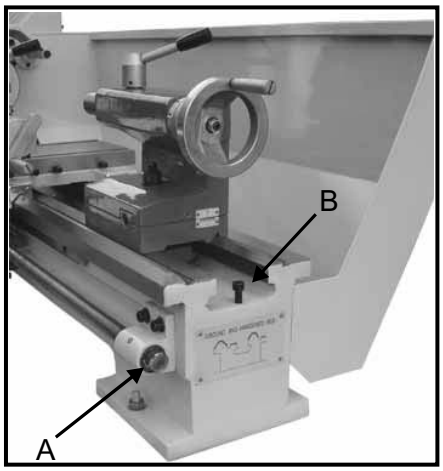

Fig. 9

NOTE:
Fit the securing screw (B, Fig. 9) at the end of the lathe be in order to prevent the tailstock from falling off the lathe bed.

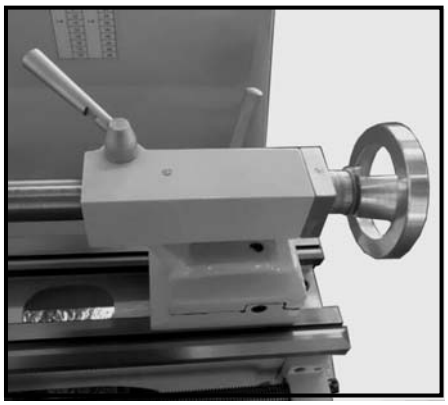

Fig. 10

CONTROLS

1. Emergency STOP Button ON/OFF Switch (A, Fig. 11)

The machine is switched on and off with ON/OFF button. Depress to stop all machine functions. To restart, lift the cover and press ON button.

2. Change-over Switch (B, Fig. 11)
After the machine is switched on, turn the switch (B) to “F” position for counter-clockwise spindle rotation (forward). Turn the switch to “R” position for clockwise spindle rotation (reverse). “0” position is OFF and the spindle remains idle.

3. Variable Speed Control Switch (C, Fig. 11)

Turn the knob (C) clockwise to increase the spindle speed. Turn the knob (C) counter-clockwise to decrease the spindle speed. The possible speed range is dependent on the position of the drive belt on the pulley.

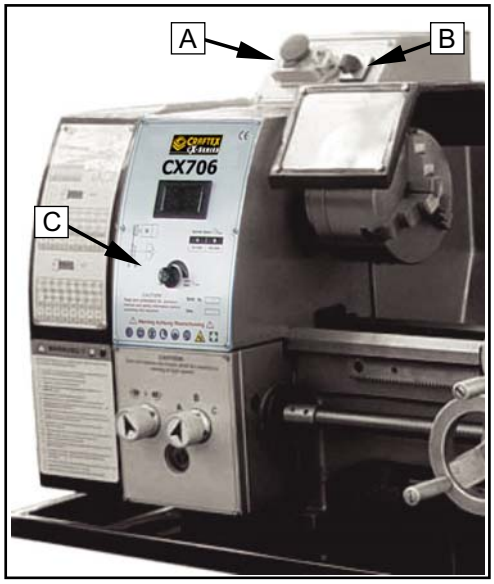

Fig. 11

4. Feed Direction Selector (D, Fig. 12)

Select carriage travel direction when the chuck is rotating in the forward direction or counter-clockwise as viewed from the front of the chuck.

5. Feed Rate Selector (E, Fig. 12)

Set the desired feed or thread rates.

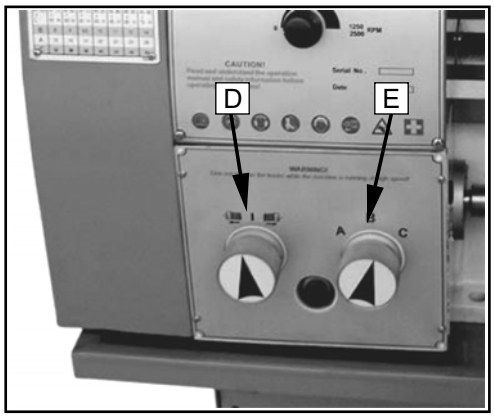

Fig. 12

6. Compound Rest Lock

Turn two hex nuts (F, Fig. 13) clockwise to lock and counter - clockwise to unlock.

7. Compound Slide Lock

Turn hex socket cap screws (G Fig. 13) clockwise, and tighten to lock. Turn counter-clockwise to loosen.

8. Cross Slide Lock

Turn hex socket cap screw (H, Fig. 13) clockwise and tighten to lock. Turn counter-clockwise and loosen to unlock.

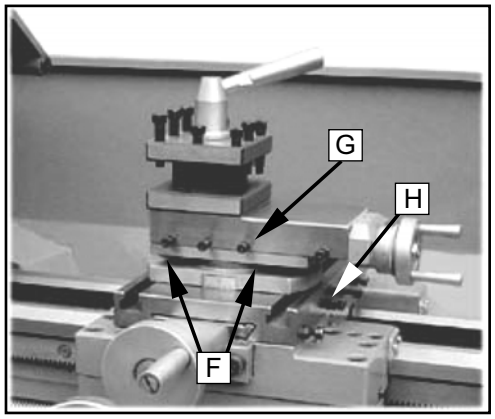

Fig. 13

9. Carriage Lock

Tighten the hex socket cap screw (A, Fig.14) clockwise to lock and counter-clockwise to unlock.

Caution: carriage lock screw must be unlocked before engaging automatic feeds or damage to lathe may occur.

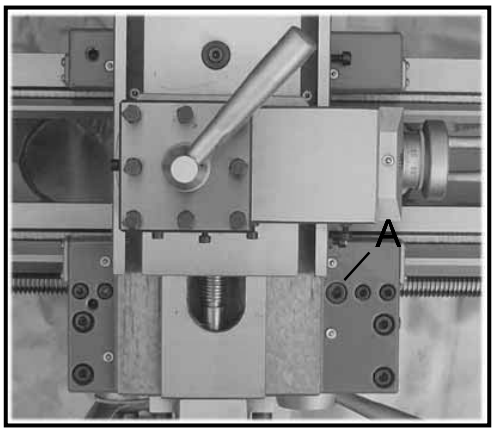

Fig. 14

10. Longitudinal Travel (B, Fig. 15)
Rotate hand wheel (B) lockwise to move the apron assembly toward the tailstock (right). Rotate the hand wheel (B) counter-clockwise to move the apron assembly toward the headstock (left).

11. Half Nut Engage Lever (C, Fig. 15)
Move the lever down to engage. Move the lever (C) up to disengage.

12. Cross Travel Handwheel (D, Fig. 15)

Clockwise rotation moves the cross slide toward the rear of the machine.

13. Compound Rest Travel Handwheel (E, Fig. 15)

Rotate clockwise or counter-clockwise to move or position.

14. Tool Post Clamping Lever (F Fig. 15)
Rotate counter-clockwise to loosen and clockwise to tighten. Rotate the tool post when the lever is unlocked.

15. Corss/Longitudinal Power Feed Lever (Q Fig. 15)
Moving the lever left side and up, engages corss feed. Moving the lever right and down, engages longitudinal feed.

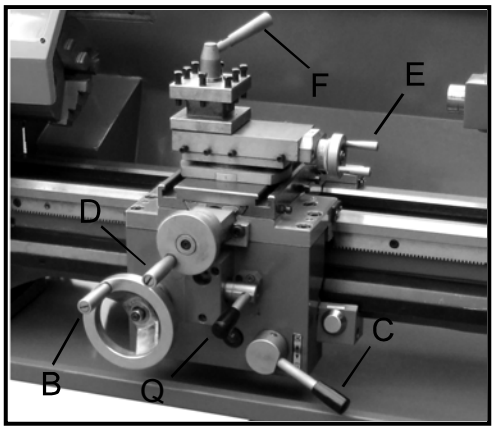

Fig. 15

16. Tailstock Clamping Handle (G, Fig. 16)
Move the handle up to lock and down to unlock.

17. Tailstock Quill Clamping Lever (H, Fig. 16)
Rotate the lever clockwise to lock the spindle and counter-clockwise to unlock.

18. Tailstock Quill Travel Handwheel (I, Fig. 16)
Rotate clockwise to advance the quill. Rotate counter-clockwise to retract the quill

19. Tailstock Off-set Adjustment (J, Fig. 16)
Three set screws located on the tailstock base (L) are used to off-set the tailstock for cutting tapers. Loosen lock screw (J) on tailstock end. Loosen one side set screw while tightening the other until the amount of off-set is indicated on scale. Tighten lock screw.

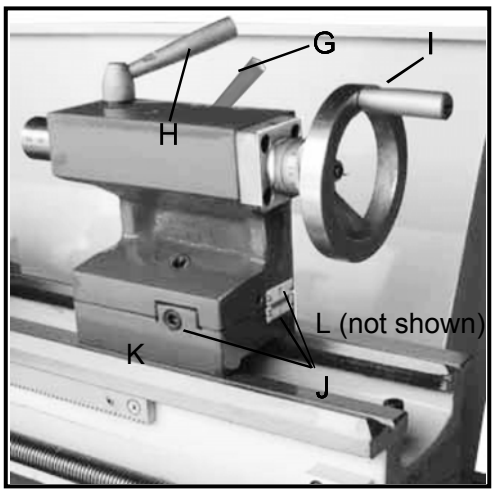

Fig. 16

OPERATIONS

Replacement of Chuck

The head spindle holding fixture is cylindrical. Loosen three set screws and nuts (A, Fig.17, only two are shown) on the lathe chuck flange to remove the chuck. Position the new chuck and fix it using the same set screws and nuts.

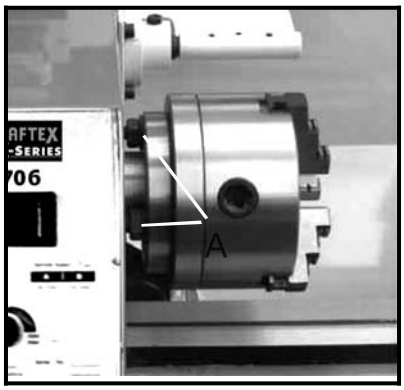

Fig. 17

Tool Set-Up

Clamp the turning tool into the toolholder.

The tool must be clamped firmly. When turning, the tool has a tendency to bend under the cutting force generated during the chip formation. For best results, tool overhang should be kept to a minimum of 3/8” or less.

The cutting angle is correct when the cutting edge is in line with the center axis of the work piece. The proper alignment of the cutting tool can be achieved by using shims. For proper positioning reference the tool tip to point of center mounted in the tailstock. If necessary, use steel spacer shims under the tool to get the required height. (Fig. 18)

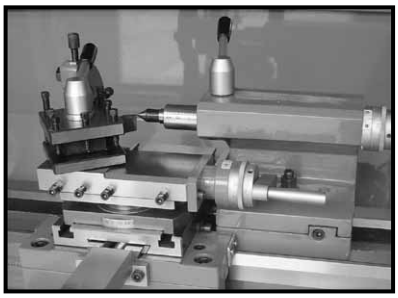

Fig. 18

Change H/L Speed

1. Unscrew the two fastening knobs (B, Fig.19) and remove the protective cover.

2. Position the belt on the pulley as indicated in the feed chart. A is low speed, B is high speed. (Fig. 20)

Caution: We suggest our customers to select low speed, as it provides improved torque!

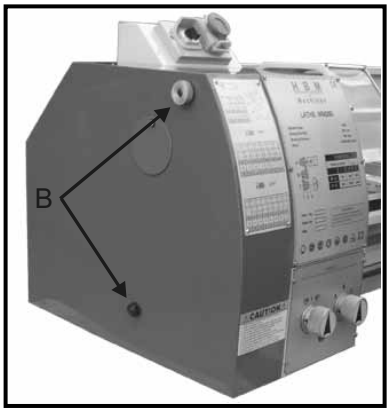

Fig. 19

Belt Adjustment

Loosen the four nuts and screws (C, Fig. 20).

Reposition the motor mounting plate to increase or

decrease the tension on the belt.

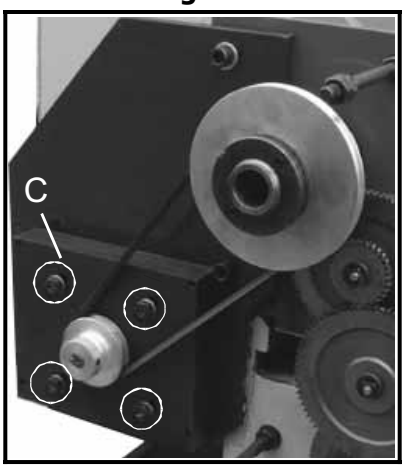

Fig. 20

Manual Turning

Apron travel, cross travel, and top slide handwheel can be operated for manual longitudinal or cross feeding. (Fig.21)

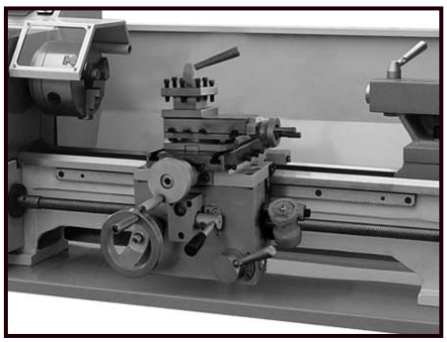

Fig. 21

Longitudinal Turning with Auto-Feed

1. Set the selector knobs (A, Fig.22) to select the feed direction and feed speed.

2. Use the feed chart (B, Fig.22) on the lathe for selecting the feed speed or the thread pitch. Adjust the change gears as required for the desired feed or thread pitch.

Fig-22

Change Gears Replacement

1. Disconnect the machine from the power source.

2. Unscrew the two fastening knobs and remove the protective cover.

3. Loosen the locking screw (C, Fig.23) on the change gear support.

4. Swing the change gear support (D, Fig.23) to the right.

5. Unscrew the bolt (E, Fig.23) from the leadscrew or the square bolts (F, Fig.23) from the quadrant bolts in order to remove the change gears from the front.

6. Install the change gears according to the thread and feed table (Fig.24) and secure the gearwheels onto the quadrant again.

7. Swing the quadrant to the left until the gears have engaged again.

8. Re-adjust the gear backlash by inserting a normal sheet of paper as an adjusting or distance aid between the gearwheels.

9. Secure the change gear support with the locking screw (C, Fig.23)

10. Install the protective cover of the headstock and reconnect the machine to the power supply.

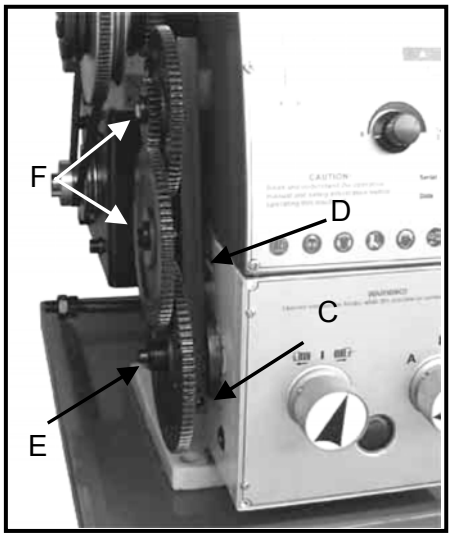

Fig. 23

THREADING AND FEEDING TABLE FOR LATHE

Z_1 Z_2 / Z_4 Z_3 / L		30 63 / 80 40 / H 75	55 63 / 80 30 / H 70
	C	0.0025	0.0035
	A	0.005	0.007
	B	0.01	0.014
	C		
	A	0.0014	0.002
	B	0.0028	0.004

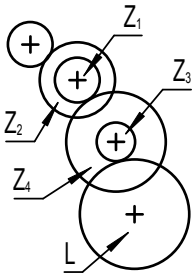

mm

Z_1 Z_2 / Z_4 Z_3 / L	35 50 / 80 63 / H 100	45 60 / 75 63 / H 100	45 50 / 80 63 / H 100	30 40 / 80 63 / H 75	45 50 / 80 63 / H 75	30 40 / 60 63 / H 80	30 40 / 50 63 / H 80	35 40 / 50 63 / H 80
C	0.35	0.40	0.45	0.50	0.60		0.75	
A	0.70	0.80	0.90	1.00	1.20	1.25	1.50	1.75
B	1.40	1.60	1.80	2.00	2.40	2.50	3.00	

1″/n

Z_1 Z_2 / Z_4 Z_3 / L	H 70 / 30 40 / 60 H	H 70 / 50 60 / 75 H	H 70 / 60 76 / 75 H	H 70 / 30 50 / 60 H	H 70 / 30 55 / 60 H	H 70 / 30 46 / 75 H	H 70 / 40 60 / 80 H	H 70 / 30 65 / 60 H	H 65 / 30 70 / 60 H	H 65 / 30 75 / 60 H	H 65 / 30 60 / 80 H	H 65 / 20 45 / 80 H	H 65 / 20 50 / 80 H
B	8	9	9.5	10	11	11.5	12	13	14	15	16		
A	16	18	19	20	22	23	24	26	28	30	32	36	40
C	32	36	38	40	44	46	48	52	56	60	64	72	80

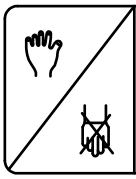

Keephandsoutofmoving partsofthismachineDo notweargiovesorloose clothes

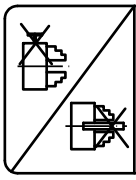

Besurethekeyisremoved fromtheehuckandworkpiece iscompletelygrlppedbefore rotatingthespindiel

Fig. 24

Straight Turning (Fig. 25)

For the straight turning operation, the tool feeds parallel to the axis of rotation of the workpiece. The feed can be either manual by turning the handwheel on the lathe saddle or the top slide, or by activating the automatic feed. The crossfeed for the depth of cut is achieved using the cross slide.

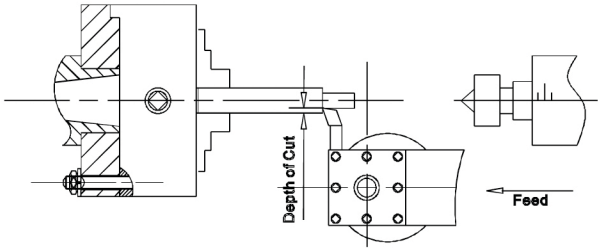

Fig. 25

Facing and Recesses (Fig. 26)

In the facing operation, the tool feeds perpendicular to the axis of rotation of the workpiece. The feed is made manually with the cross slide handwheel. The crossfeed for cut depth is made with the top slide or lathe saddle.

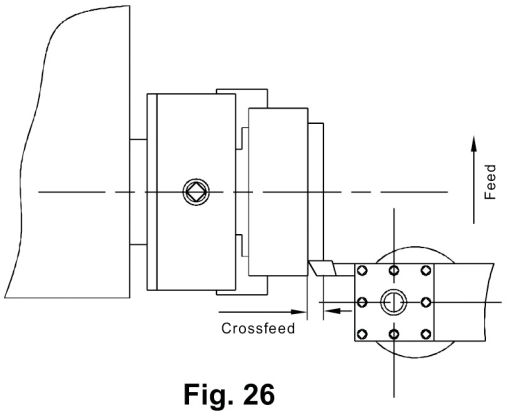

Fig. 26

Turning Between Centers (Fig. 27)

For turning between centers, it is necessary to remove the chuck from the spindle. Fit the M.T.3 center into the spindle nose and the M.T.4 center into the tailstock. Mount the workpiece fitted with a driver dog between the centers. The driver is driven by a catch or face plate.

Note: Always use a small amount of grease on the tailstock center to prevent center tip form overheating.

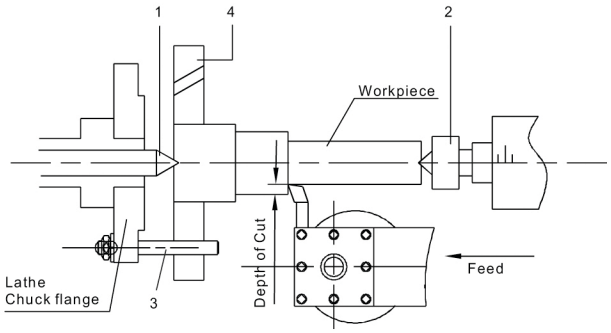

1.Fixed Centre 60° 2.Living Centre 60°
3.Dog Drive Pin 4.Dog Plate

Fig. 27

Taper Turning Using Tailstock Off-Set

Work to a side angle of 5 can be turned by off-setting the tailstock. The angle depends on the length of the workpiece.

To off-set the tailstock, loosen locking screw (A, Fig28) Loosen the set screw (B, Fig.28) on right end of the tailstock. Loosen the front adjusting screw(C, Fig.28) and take up the same amount by tightening the rear adjusting screw (D, Fig.28) until the desired taper has been reached. The desired cross-adjustment can be read off the scale. (E, Fig.28). First retighten the set screw (B, Fig,28) and then the two (front and rear) adjusting screw to lock the tailstock in position. Retighten the locking screw (A, Fig.28) of the tailstock. The workpiece must be held between to centers and driven by a face plate and driver dog.

After taper turning, the tailstock should be returned to its original position according to the zero position on the scale of tailstock. (E, Fig.28)

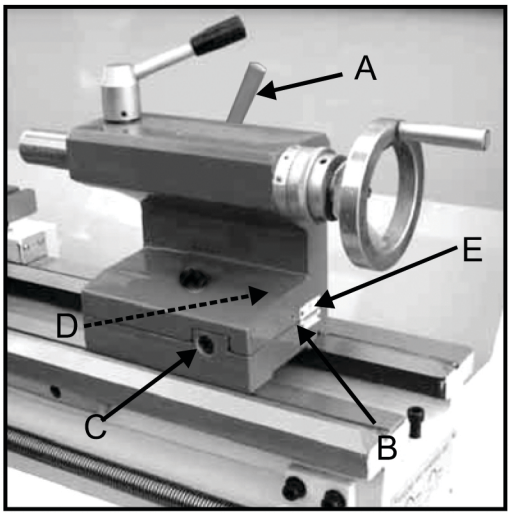

Fig. 28

Taper Turning by Setting the Top Slide

By angling the top slide, tapers may be turned manually with the top slide. (Fig. 29)
Rotate the top slide to the required angle. A graduated scale permits accurate adjustment of the top slide. The crossfeed is performed with the cross slide. This method can only be used for short tapers.

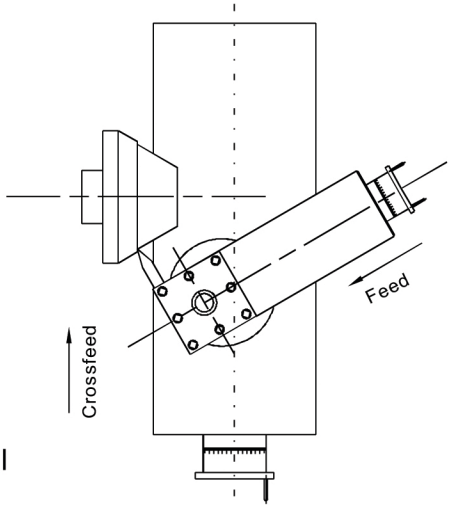

Fig. 29

Thread Cutting

Set the machine up to the desired thread pitch (according to the threading chart, Fig.24). Start the machine and engage the half nut. When the tool reaches the work-piece, it will cut the initial threading pass. When the tool reaches the end of the cut, stop the machine by turning the motor off and at the same time back the tool out of the work-piece so that it clears the thread. Do not disengage the half nut lever. Reverse the motor direction to allow the cutting tool to traverse back to the starting point. Repeat these steps until you have obtained the desired results.

NOTES

Example: Male Thread

- The workpiece diameter must have been turned to the diameter of the desired thread.
- The workpiece requires a chamfer at the beginning of the thread and an undercut at the thread runout.
- The speed must be as low as possible.
- The change gears must have been installed according to the required pitch.
- The thread cutting tool must be exactly the sample shape as the thread, must be absolutely rectangular and clamped so that it coincides exactly with the turning center.
- The thread is produced in various cutting steps so that the cutting tool has to be turned out of the thread completely (with the cross slide) at the end of each cutting step.
- The tool is withdrawn with the leadscrew nut engaged by inverting the change-over switch.
- Stop the machine and feed the thread cutting tool in low cut depths using the cross slide.
- Before each passage, place the top slide approximately 0.2 to 0.3mm to the left and right alternately in order to cut the thread free. This way, the thread cutting tools cuts only on one thread flank with each passage. Keep cutting the thread free until you have almost reached the full depth of thread.

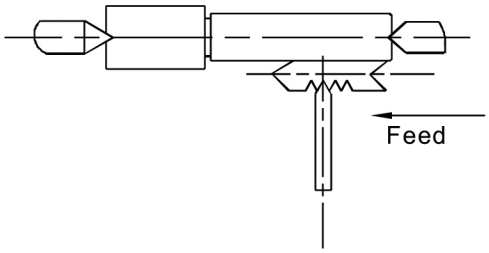

Fig. 30

Lathe Accessories

Three Jaw Universal Lathe Chuck

Using this universal chuck, round, triangular, square, hexagonal octagonal, and twelve-cornered stock may be clamped. (Fig.31)

Note: new lathes have very tight fitting jaws. This is necessary to ensure accurate clamping and long service life. With repeated opening and closing, the jaws adjust automatically and their operation becomes progressively smoother.

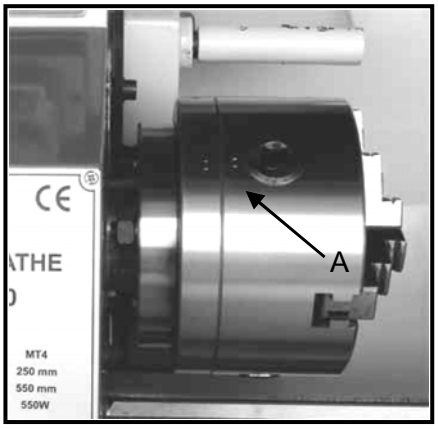

Fig. 31

Note:

For the original 3-jaw chuck mounted on the lathe, the factory has mounted the chuck in the best way to guarantee the holding accuracy with two “0” mark (A, Fig.) showed on the chuck and chuck flange.

There are two types of jaws: Internal and external jaws. Please note that the number of jaws fit with the number inside the chuck’s groove. Do not mix them together. When you are going to mount them, please mount them in ascending order 1-2-3, when you are going to take them out, be sure to take them out in descending order 3-2-1, one by one. After you finished this procedure, rotate the jaws to the smallest diameter and check that the three jaws are well fitted.

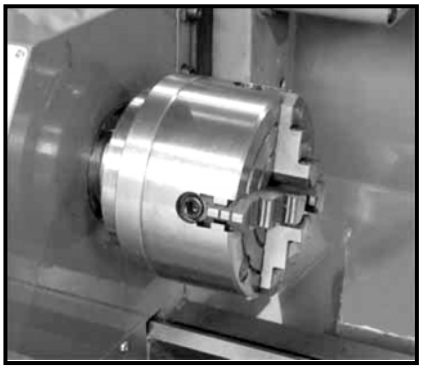

Fig. 32

Four Jaw Independent Lathe Chuck

This special chuck has four independently adjustable chuck jaws. These permit the holding of asymmetrical pieces and enable the accurate set-up of cylindrical pieces. (Fig.32)

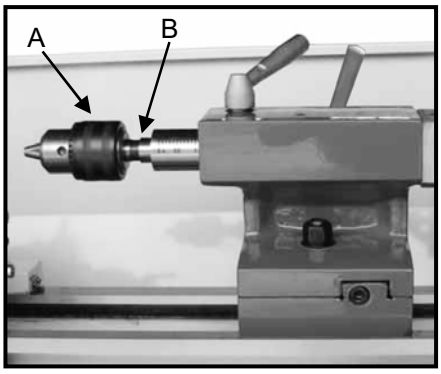

Fig. 33

Drill Chuck (Optional)

Use the drill chuck to hold centering drills and twist drills in the tailstock. (A, Fig.33)

Morse Taper Arbor (Optional)

An arbor is necessary for mounting the drill chuck in the tailstock. It has a No. 2 Morse taper. (B, Fig.33)

Live Center (Optional)

The live center is mounted in ball bearings. Its use is highly recommended for turning at speeds in excess of 600 RPM. (Fig. 34)

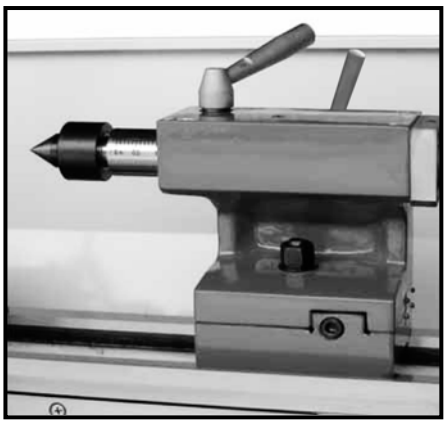

Fig. 34

Steady Rest

The steady rest serves as a support for shafts on the free tailstock end. For many operations the tailstock can not be used as it obstructs the turning tool or drilling tool, and therefore, must be removed from the machine. The steady rest, which functions as an end support, ensures chatter-free operation. The steady rest is mounted on the bedways and is secured from below with a locking plate. The sliding fingers require continuous lubrication at the contact points to prevent premature wear. (Fig.35)

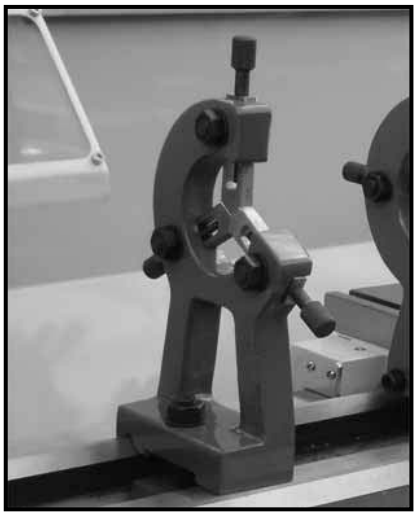

Fig. 35

Setting the Steady Rest

1. Loosen three hex nuts. (A, Fig.36)
2. Loosen knurled screw (B, Fig.36) and open the sliding fingers. (C, Fig.36) until the steady rest can be moved with its finger around the workpiece. Secure the steady rest in position.
3. Tighten knurled screws so that fingers are snug but not tight against the workpiece. Tighten three nuts (A, Fig.36). Lubricate the sliding points with machine oil.
4. When, after prolonged operation, the jaw show wear, the tips of the fingers may be filed or remilled.

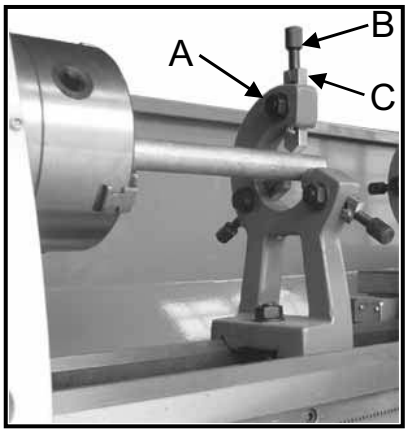

Fig. 36

Follow Rest

The follow rest is mounted on the saddle and follow the movement of the turning tool. Only two sliding fingers are required. The place of the third finger is taken by the turning tool. The follow rest is used for turning operations on long, slender workpieces. It prevents flexing of the workpiece under pressure from the turning tool. (Fig.37)
Set the fingers snug to the workpiece but not overly tight. Lubricate the fingers during operation to prevent premature wear.

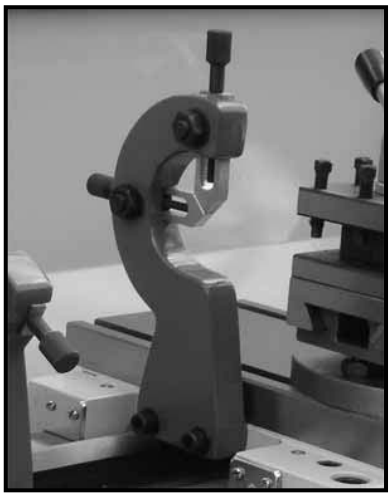

Fig. 37

ADJUSTMENT

After a period of time, wear in some of the moving components may need to be adjusted.

Main Spindle Bearings

The main spindle bearings are adjusted at the factory. If end play becomes evident after considerable use, the bearings may be adjusted.

How to Adjust?

Loosen two hex socket cap screws (A, Fig.38) in the slotted nut (B, Fig.38) on the back of the spindle. Tighten slotted nut until all end play is taken up. The spindle should still revolve freely. Tighten two hex socket cap screws (A, Fig.38).
Caution: excessive tightening or preloading will damage the bearings.

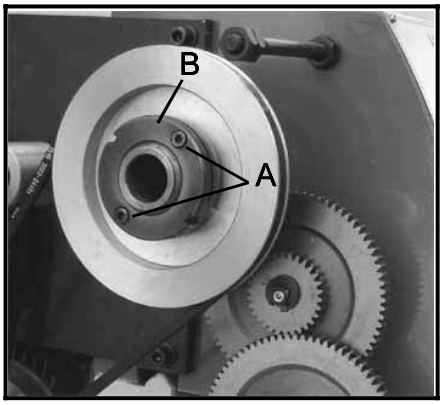

Fig. 38

Adjustment of Cross Slide

The cross slide is fitted with a gib strip(C, Fig.39) and is adjusted with screws (D, Fig.39) fitted with lock nuts. (E, Fig.39) Loosen the lock nuts and tighten the set screws until slide moves freely without play. Tighten lock nuts to retain adjustment.

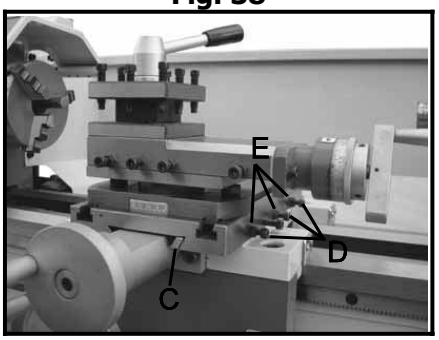

Fig. 39

Adjustment of Top Slide

The top slide is fitted with a gib strip(F, Fig.40) and can is adjusted with screws (G, Fig. 40) fitted with lock nuts. (H, Fig. 40) Loosen the lock nuts and tighten the set screws until slide moves freely without play. Tighten lock nuts to retain adjustment.

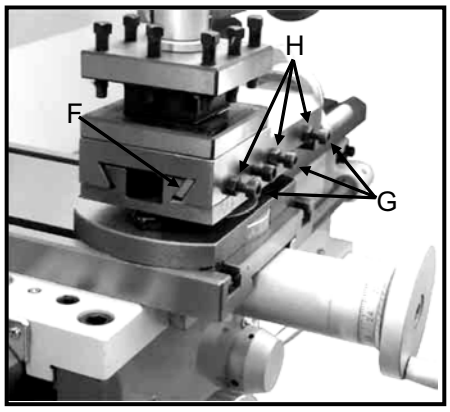

Fig. 40

Adjustment of Half Nut Guide

Loosen the nut (I, Fig.41) on the right side bottom of the apron and adjust the control screws (J, Fig.41) until both half nuts move freely without play. Tighten the nut.

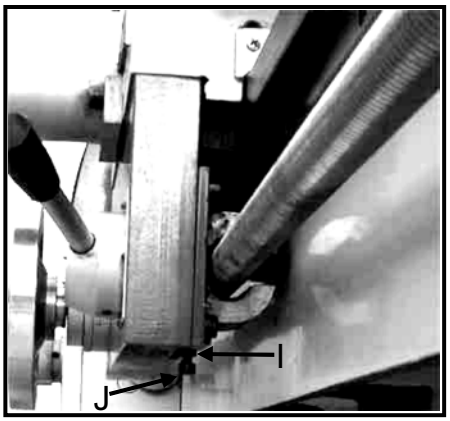

Fig. 41

LUBRICATION

⚠ CAUTION

Lathe must be serviced at all lubrication points and all reservoirs filled to operating level before the lathe is placed into service!
Failure to comply may cause serious damage!

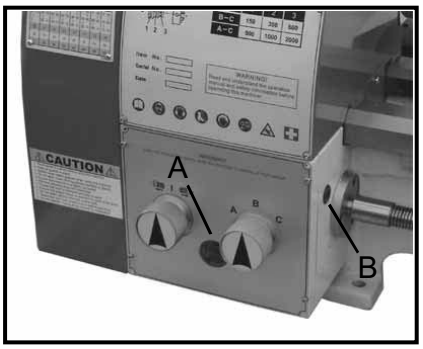

Fig. 41

NOTES:
Lubricate all slideways lightly before every use. Lubricate the change gears and the leadscrew slightly with a lithium-based grease.

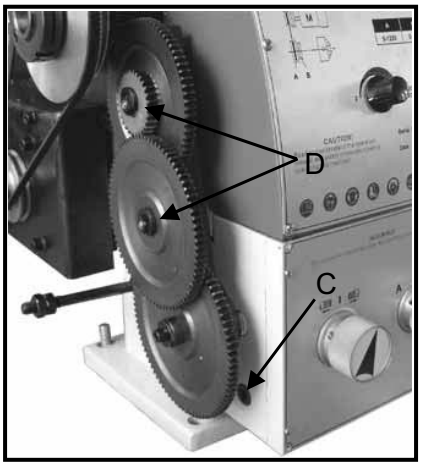

Fig. 42

1. Gearbox

Oil Must be up to indicator mark in oil sight glass (A,Fig41). Top off with Mobilgear 627 or equivalent. Fill by pulling plug (B, Fig. 41). To drain, remove drain plug on the right side of headstock(C, Fig.42). Drain oil completely and refill after the first three months of operation. Then, change oil in the headstock annually.

2. Change Gear

Lubricate two oil ports (D, Fig.42) on the gear shafts with 20W machine oil once daily.

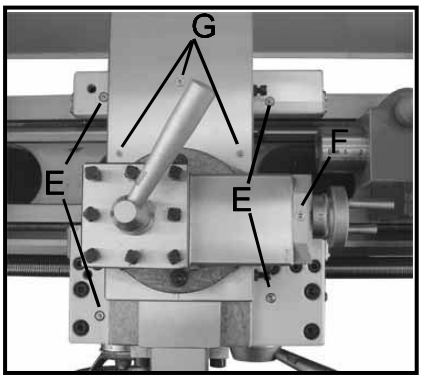

Fig. 43

3. Carriage

Lubricate Four oil ports (E, Fig. 43) with 20W machine oil once daily.

4. Top Slide

Lubricate one oil port (F, Fig. 43) with 20W machine oil once daily.

5. Cross Slide

Lubricate two oil ports (G, Fig. 43) with 20W machine oil once daily.

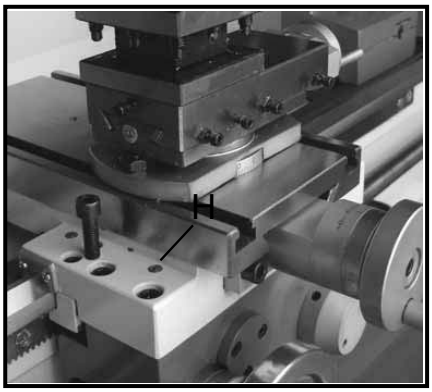

Fig. 44

6. Apron

Lubricate one oil ports (H, Fig. 44) with 20W machine oil once daily.

7. Leadscrew

Lubricate the oil port (A, Fig. 45) with 20W machine oil once daily.

8. Tailstock

Lubricate two oil ports (B, Fig. 45) with 20W machine oil once daily.

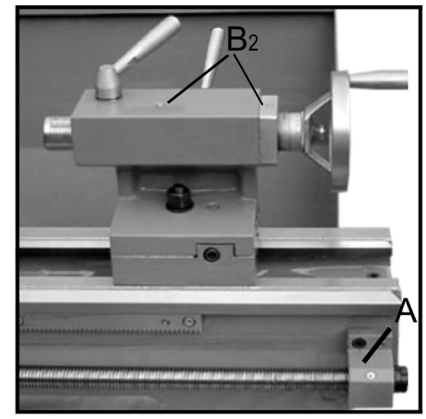

Fig. 45

ELECTRICAL CONNECTIONS

⚠ WARNING!

Connection of the lathe and all other electrical work may only be carried out by an authorized electrician!

Failure to comply may cause serious injury and damage to the machinery and property

The Lathe is rated at 750W, 1PH, 110V only. Confirm power available at the lathe's location is the same rating as the lathe. Using the wiring diagram (Fig.46) for connecting the lathe to the mains supply.

Make sure the lathe in properly grounded.

The following is wiring diagram of the lathe: (Fig.46)

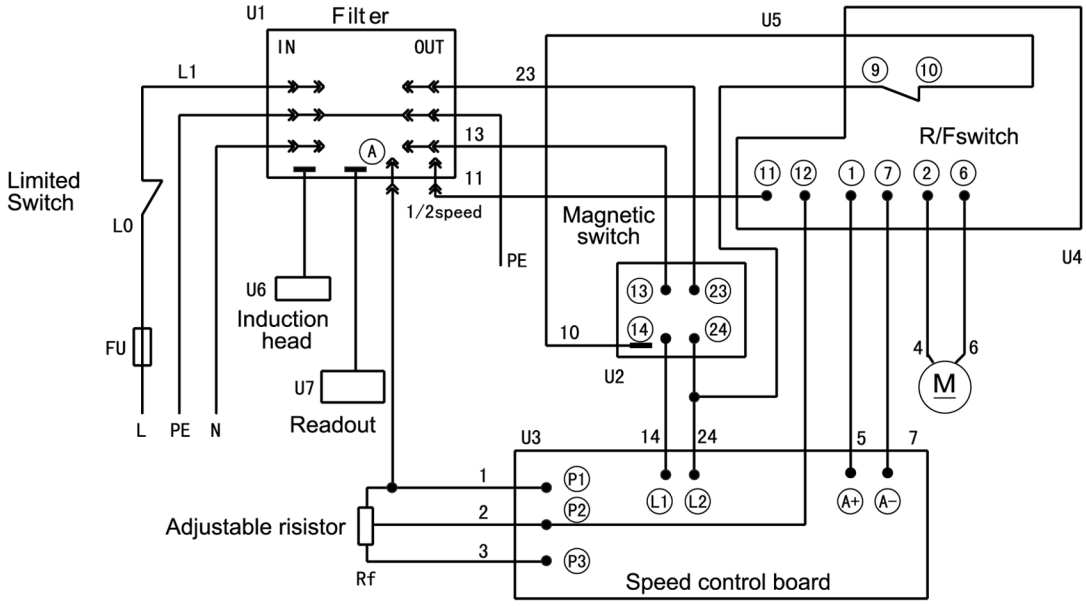

Fig.4

MAINTENANCE

Keep the maintenance of the machine tool during the operation to guarantee the accuracy and service life of the machine tool.

1. In order to retain the machine's precision and functionality, it is essential to treat it with care, keep it clean and grease and lubricate it regularly. Only through good care, you can be sure that the working quality of the machine will remain constant.

NOTES:
Disconnect the machine plug from the mains supply whenever you carry out cleaning, maintenance or repair work!

Oil, grease and cleaning agents are pollutants and must not be disposed of through the drains or in normal refuse. Dispose of those agents in accordance with current legal requirements on the environment. Cleaning rags impregnated with oil, grease and cleaning agents are easily inflammable. Collect cleaning rags or cleaning wool in a suitable closed vessel and dispose of them in an environmentally sound way – do not put them with normal refuse!

2. Lubrication all slideways lightly before every use. The change gears and the leadscrew must also be lightly lubricated with lithium base grease.

3. During the operation, the chips which falls onto the sliding surface should be cleaned timely, and the inspection should be often made to prevent chips falling into the position between the machine tool saddle and lathe bed guide way. Asphalt felt should be cleaned at certain time.

NOTES:
Do not remove the chips with your bare hands. There is a risk of cuts due to sharp-edged chips.
Never use flammable solvents or cleaning agents or agents that generate noxious fumes!
Protect electrical components such as motors, switches, switch boxes, etc., against humidity when cleaning.

4. After the operation every day, eliminate all the chips and clean different part of the machine tool and apply machine tool oil to prevent rusting.

5. In order to maintain the machining accuracy, take care of the center, the surface of the machine tool for the chuck and the guide way and avoid mechanical damage and the wear due to improper guide.

6. If the damage is found, the maintenance should be done immediately.

NOTES:
Repair work may only be carried out by qualified personnel with the corresponding mechanical and electrical knowledge.

TROUBLESHOOTING

Problem	Possible Reason	Elimination
Surface of workpiece too rough	Tool blunt Tool springs Feed too high Radius at the tool tip too small	Resharpen tool Clamp tool with less overhang Reduce feed Increase radius
Workpiece becomes coned	Centers are not aligned (tailstock has offset) Top slide not aligned well (cutting with the top slide)	Adjust tailstock to the center Align top slide well
Lathe is chattering	Feed too high Slack in main bearing	Reduce feed Adjust the main bearing
Center runs hot	Workpiece has expanded	Loosen tailstock center
Tool has a short edge life	Cutting speed too high Crossfeed too high Insufficient cooling	Reduce cutting speed Lower crossfeed(finishing allowance should not exceed 0.5mm) More coolant
Flank wear too high	Clearance angle too small Tool tip not adjusted to center high	Increase clearance angle Correct height adjustment of the tool
Cutting edge breaks off	Wedge angle too small (heat build-up) Grinding crack due to wrong cooling Excessive slack in the spindle bearing Arrangement (vibrations)	Increase wedge angle Cool uniformly Adjust the slack in the spindle bearing arrangement
Cut thread is wrong	Tool is clamped incorrectly or has been started grinding the wrong way Wrong pitch Wrong diameter	Adjust too to the center Grind angle correctly Adjust the right pitch Turn the workpiece to the correct diameter
Spindle does not activate	Emergency stop switch activated	Unlock emergency stop switch

CX706 - Headstock Assembly

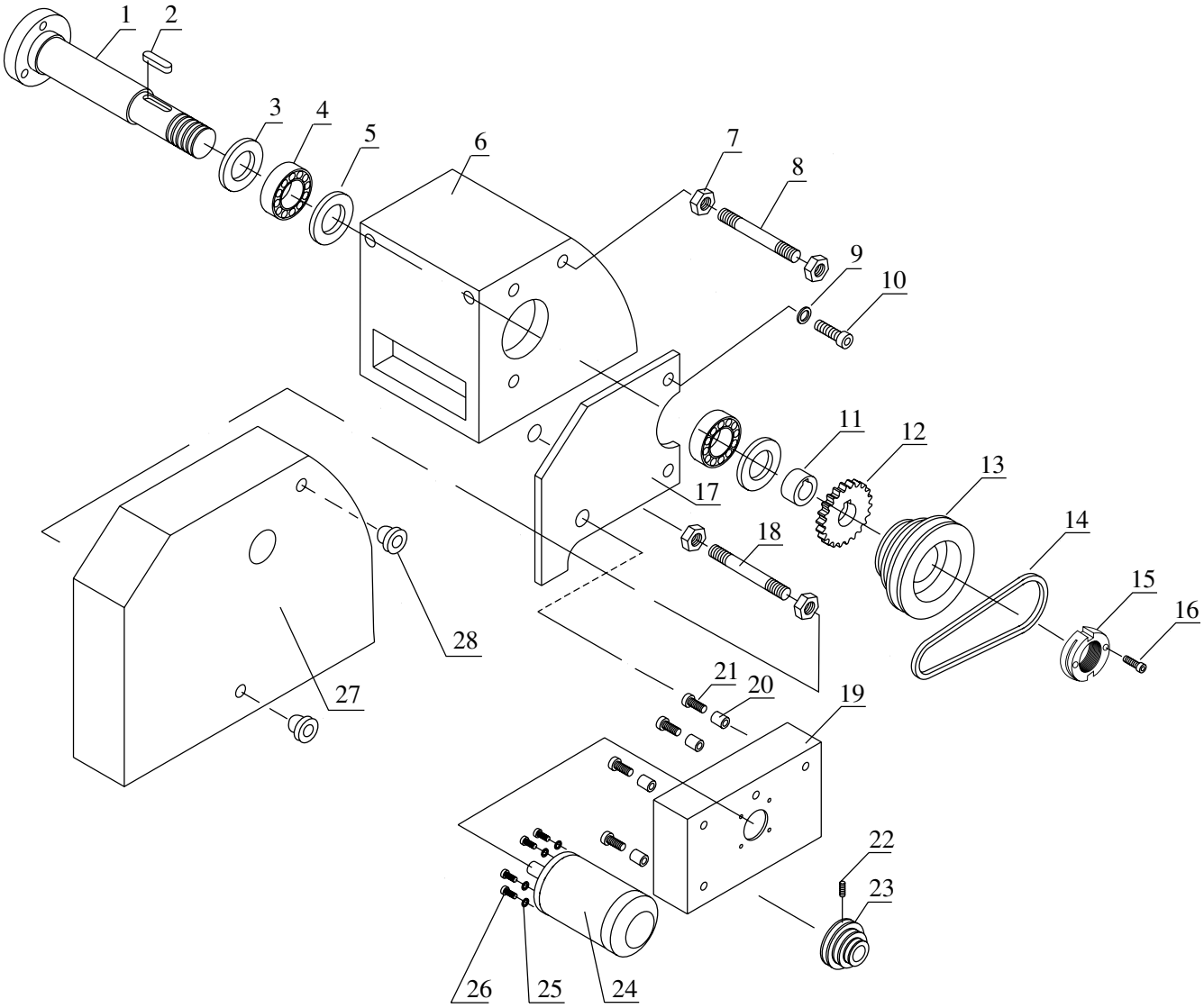

CX706 Headstock Assembly

No.	Part No.	Customer's Part No.	Description & Specification	QTY
1	1	PCX706HS01	SPINDLE	1
2	2	PCX706HS02	KEY M8 X 8 x 45	1
3	3	PCX706HS03	EXTERNAL SPACER	2
4	4	PCX706HS04	SPINDLE BEARING 32009	2
5	5	PCX706HS05	INNER SPACER	2
6	6	PCX706HS06	HEADSTOCK BODY	1
7	7	PCX706HS07	NUT - HEX M10-1.5	4
8	8	PCX706HS08	STUD - M10-1.5 X 115 THREADED DOUBLE END	1
9	9	PCX706HS09	WASHER - FLAT M10	3
10	10	PCX706HS10	SCREW - CAP M10-1.5 X 20	2
11	11	PCX706HS11	SLEEVE	1
12	12	PCX706HS12	GEAR 40T	1
13	13	PCX706HS13	PULLEY - SPINDLE	1
14	14	PCX706HS14	V-BELT 7M730	1
15	15	PCX706HS15	NUT - LOCK (SPECIAL)	1
16	16	PCX706HS16	SCREW - CAP M5-0.8 X 10	1
17	17	PCX706HS17	SUPPORT PLATE	1
18	18	PCX706HS18	STUD - M10-1.5 X 125 THREADED DOUBLE END	1
19	19	PCX706HS19	MOTOR MOUNTING PLATE	1
20	20	PCX706HS20	BUSHING Φ21MM	4
21	21	PCX706HS21	SCREW - CAP M6-1.0 X 12	4
22	22	PCX706HS22	SCREW - SET M6-1.0 X 6	1
23	23	PCX706HS23	PULLEY - MOTOR	1
24	24	PCX706HS24	MOTOR DC (108ZYT005AL)	1
25	25	PCX706HS25	WASHER - FLAT M8	4
26	26	PCX706HS26	SCREW - CAP M8-1.25 X 25	4
27	27	PCX706HS27	COVER	1
28	28	PCX706HS28	KNOB - KNURLED METAL	2

CX706 Gearbox Assembly

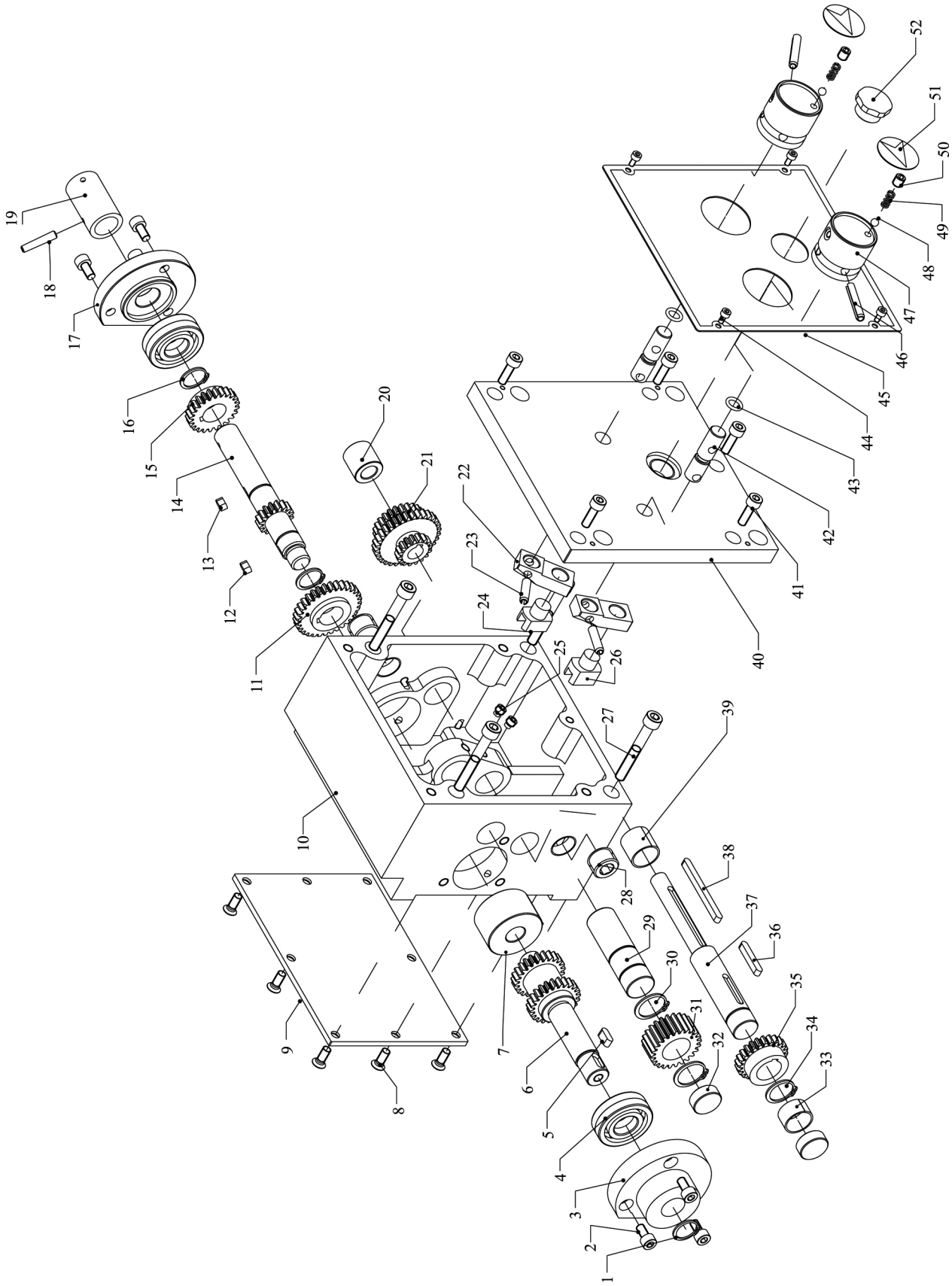

CX706 Gearbox Assembly

No.	Part No.	Customer's Part No.	Description & Specification	QTY
29	1	PCX706GB01	C-RING Φ14 EXTERNAL	1
30	2	PCX706GB02	SCREW - CAP M5-0.8 X 10	6
31	3	PCX706GB03	LEFT FLANGE	1
32	4	PCX706GB04	BEARING 6202	2
33	5	PCX706GB05	KEY M5 X 5 X 12	1
34	6	PCX706GB06	SHAFT WITH DOUBLE GEAR 24/24T, M=1.25	1
35	7	PCX706GB07	SLEEVE	1
36	8	PCX706GB08	SCREW - FLAT HEAD M5-0.8 X 8	8
37	9	PCX706GB09	REAR COVER	1
38	10	PCX706GB10	GEAR BOX BODY	1
39	11	PCX706GB11	GEAR 32T, M=1.25	1
40	12	PCX706GB12	KEY M4 X 4 X 8	1
41	13	PCX706GB13	KEY M4 X 4 X 10	1
42	14	PCX706GB14	GEAR SHAFT	1
43	15	PCX706GB15	GEAR 24T, M=1.25	1
44	16	PCX706GB16	C-RING M15 EXTERNAL	2
45	17	PCX706GB17	RIGHT FLANGE	1
46	18	PCX706GB18	PIN - TAPER Φ4 X 22 STEEL	1
47	19	PCX706GB19	COUPLING SLEEVE	1
48	20	PCX706GB20	RIGHT CHOKE PLUG	1
49	21	PCX706GB21	TRIPLE GEAR 16/32/24T, M=1.25	1
50	22	PCX706GB22	FORK SEAT	2
51	23	PCX706GB23	PIN - SPRING Φ5 X 16	2
52	24	PCX706GB24	FORK - I	1
53	25	PCX706GB25	SCREW - SET M6-1.0 X 6	2
54	26	PCX706GB26	FORK II	2
55	27	PCX706GB27	SCREW - CAP M6-1.0 X 45	4
56	28	PCX706GB28	SCREW - SET M16- X 10 (FLAT)	2
57	29	PCX706GB29	SHAFT	1
58	30	PCX706GB30	C-RING Φ18mm EXTERNAL	2
59	31	PCX706GB31	GEAR - INTERMEDIATE	1
60	32	PCX706GB32	LEFT CHOKE PLUG	1
61	33	PCX706GB33	SLIDING BEARING SF-1 1610	1
62	34	PCX706GB34	C-RING (16) EXTERNAL	1
63	35	PCX706GB35	GEAR 24T	1
64	36	PCX706GB36	KEY - FLAT 4x4x25	1
65	37	PCX706GB37	SHAFT	1
66	38	PCX706GB38	KEY M4 X 4 X 50	1
67	39	PCX706GB39	SLIDING BEARING SF-1 1620	1
68	40	PCX706GB40	FRONT COVER	1
69	41	PCX706GB41	SCREW - CAP M5-0.8 X 16	5
70	42	PCX706GB42	AXLE - SMALL	2
71	43	PCX706GB43	O-RING Φ10 X 1.8	2
72	44	PCX706GB44	SCREW - CAP M3-0.5 X 6	4
73	45	PCX706GB45	LABEL - GEAR BOX	1
74	46	PCX706GB46	PIN - SPRING Φ5 X 26	2
75	47	PCX706GB47	HANDLE BASE	2
76	48	PCX706GB48	STEEL BALL Φ5	2
77	49	PCX706GB49	SPRING Φ0.8 X 4 X 14	2
78	50	PCX706GB50	SCREW - SET M6-1.0 X 6 (FLAT)	2
79	51	PCX706GB51	LABEL - INDICATOR	2
80	52	PCX706GB52	OIL SIGHT GLASS 10	1

CX706 Carriage Tool Post Cross Slide Assembly

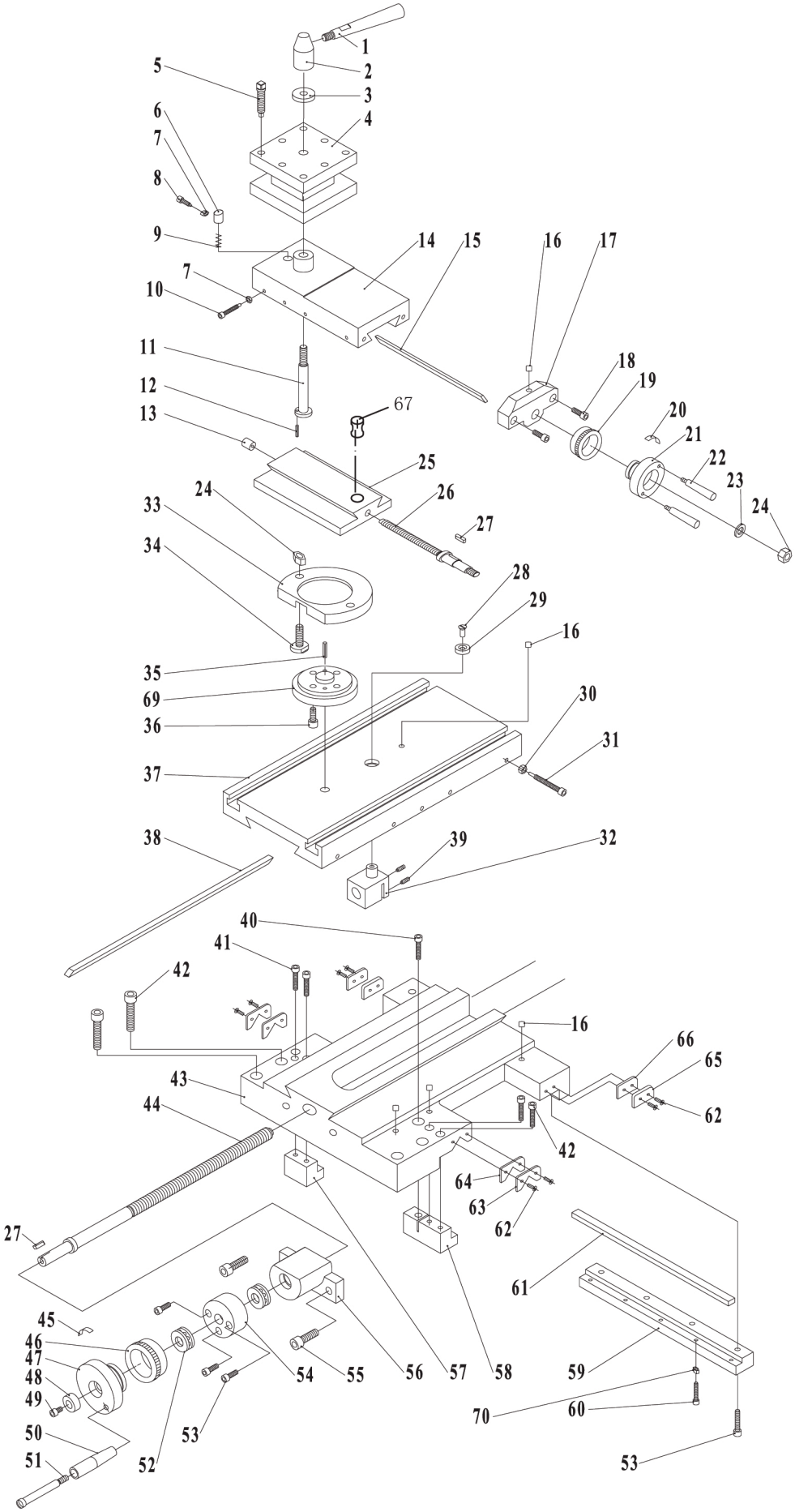

CX706 Carriage Tool Post Cross Slide Assembly

No.	Part No.	Customer's Part No.	Description & Specification	QTY
81	1	PCX706CS01	HANDLE	1
82	2	PCX706CS02	HANDLE BASE	1
83	3	PCX706CS03	WASHER - FLAT (SPECIAL)	1
84	4	PCX706CS04	TOOL POST 4-WAY	1
85	5	PCX706CS05	SCREW - SQUARE HEAD (SPECIAL) M8-1.25 X 30	1
86	6	PCX706CS06	PIN - (SPECIAL)	1
87	7	PCX706CS07	NUT - HEX M4-0.7 X 16	4
88	8	PCX706CS08	SCREW - CAP M4-0.7 X 16	1
89	9	PCX706CS09	SPRING 0.8 X 4.8 X 16	1
90	10	PCX706CS10	SCREW - CAP M4-0.7 X 20	4
91	11	PCX706CS11	TOOL POST AXLE	1
92	12	PCX706CS12	PIN - SPRING Φ3 X 6	1
93	13	PCX706CS13	OIL CUP Φ10	2
94	14	PCX706CS14	TOP SLIDE	1
95	15	PCX706CS15	GIB - TOP SLIDE	1
96	16	PCX706CS16	OIL CUP Φ6	9
97	17	PCX706CS17	BRACKET	1
98	18	PCX706CS18	SCREW - CAP M5-0.8 X 16	2
99	19	PCX706CS19	GRADUATED FRICTION DIAL	1
100	20	PCX706CS20	SMALL SPRING PIECE	1
101	21	PCX706CS21	HAND WHEEL	1
102	22	PCX706CS22	HAND WHEEL HANDLE	2
103	23	PCX706CS23	WASHER Φ8	1
104	24	PCX706CS24	NUT - HEX M8-1.25	3
105	25	PCX706CS25	TOP SLIDE BASE	1
106	26	PCX706CS26	LEADSCREW - TOP SLIDE T8X20TPI	1
107	27	PCX706CS27	KEY M3 X 3 X 10	2
108	28	PCX706CS28	SCREW - CAP M5-0.8 X 40	1
109	29	PCX706CS29	WASHER - FLAT (SPECIAL)	1
110	30	PCX706CS30	NUT - HEX M5-0.8	4
111	31	PCX706CS31	SCREW - CAP M5-0.8 X 40	5
112	32	PCX706CS32	NUT - CROSS SLIDE LEADSCREW 10TPI	1
113	33	PCX706CS33	CLAMPING RING	1
114	34	PCX706CS34	BOLT - T-BOLT M8-1.25 X 22	2
115	35	PCX706CS35	PIN - SPRING Φ4 X 16	2
116	36	PCX706CS36	SCREW - CAP M6-1.0 X 14	4
117	37	PCX706CS37	CROSS SLIDE	1
118	38	PCX706CS38	GIB - CROSS SLIDE	1
119	39	PCX706CS39	SCREW - SET M4-0.7 X 12 (SLOTTED)	2
120	40	PCX706CS40	SCREW - CAP M8-1.25 X 35	1
121	41	PCX706CS41	SCREW - CAP M5-0.8 X 25	4
122	42	PCX706CS42	SCREW - CAP M6-1.0 X 35	4
123	43	PCX706CS43	CARRIAGE	1
124	44	PCX706CS44	LEADSCREW - CROSS SLIDE T14X10TPI	1
125	45	PCX706CS45	SMALL SPRING PIECE	1
126	46	PCX706CS46	GRADUATED FRICTION DIAL	1
127	47	PCX706CS47	HANDWHEEL	1
128	48	PCX706CS48	WASHER - FLAT (JY240-04-25) (special)	1

CX706 Carriage Tool Post Cross Slide Assembly

No.	Part No.	Customer's Part No.	Description & Specification	QTY
129	49	PCX706CS49	SCREW - CAP M5-0.8 X 8	1
130	50	PCX706CS50	HANDLE SLEEVE	1
131	51	PCX706CS51	HANDLE BOLT	1
132	52	PCX706CS52	BEARING - THRUST 5101	2
133	53	PCX706CS53	SCREW - CAP M5-0.8 X 20	7
134	54	PCX706CS54	BASE	1
135	55	PCX706CS55	SCREW - CAP M8-1.25 X 20	2
136	56	PCX706CS56	BRACKET	1
137	57	PCX706CS57	CLAMPING BLOCK I	1
138	58	PCX706CS58	CARRIAGE BRAKE BLOCK	1
139	59	PCX706CS59	CLAMPING BLOCK II	1
140	60	PCX706CS60	SCREW - CAP M4-0.7 X 20	5
141	61	PCX706CS61	GIB - CARRIAGE	1
142	62	PCX706CS62	SCREW - PAN HD M3-0.5 X 8	8
143	63	PCX706CS63	V-WIPER	2
144	64	PCX706CS64	V RUBBER WIPER	2
145	65	PCX706CS65	FLAT WIPER	2
146	66	PCX706CS66	FLAT RUBBER WIPER	2
147	67	PCX706CS67	NUT-TOPSLIDE SCREW 20TPI	1
149	69	PCX706CS69	SWIVEL BASE	1
150	70	PCX706CS70	NUT - HEX M4-0.7	5

CX706 - Apron Assembly

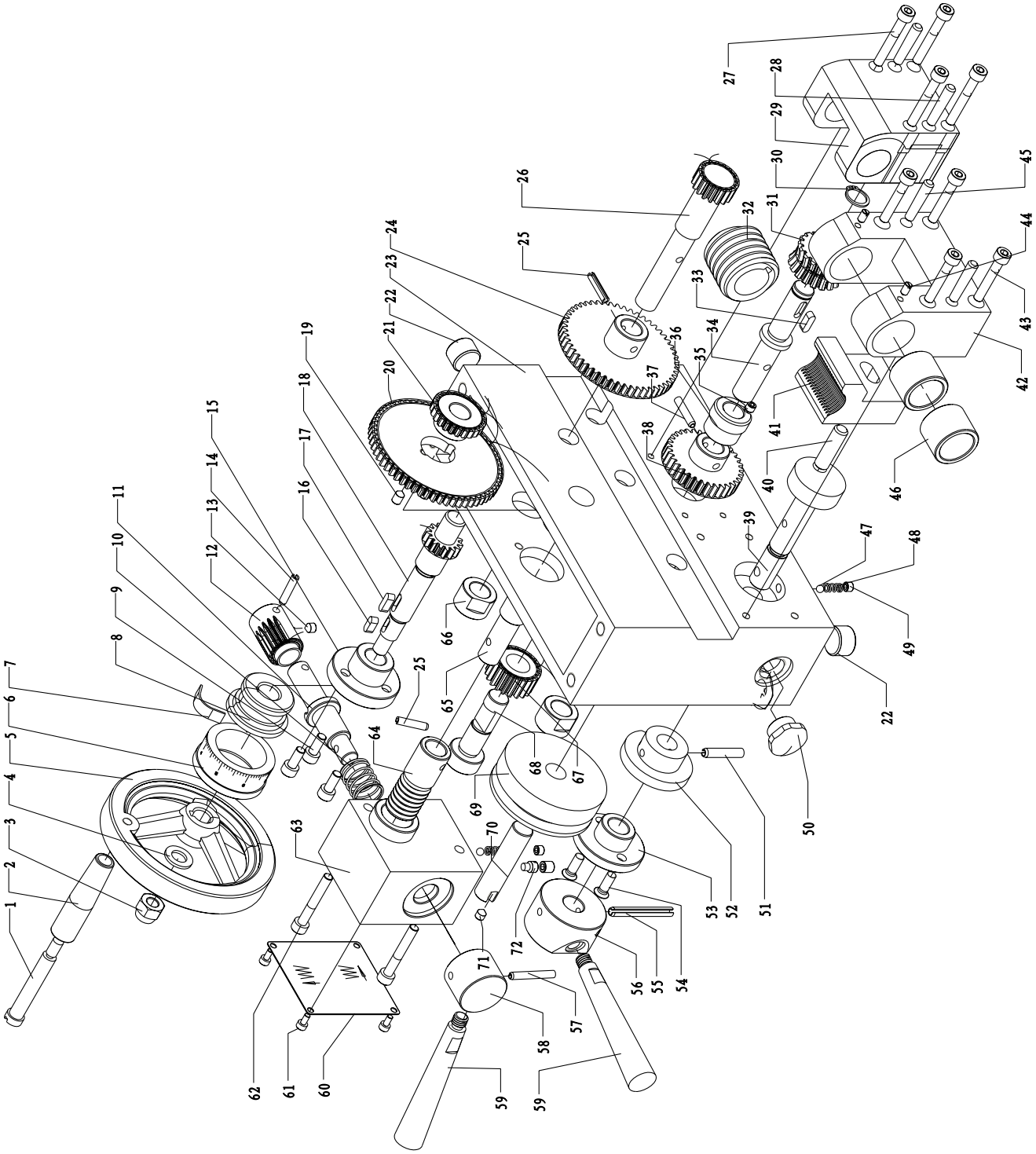

CX706 Apron Assembly

No.	Part No.	Customer's Part No.	Description & Specification	QTY
151	1	PCX706AP01	HANDLE BOLT	1
152	2	PCX706AP02	HANDLE SLEEVE	1
153	3	PCX706AP03	NUT - ACORN M8-1.25 GB/T889/1-2000	1
154	4	PCX706AP04	WASHER - FLAT M8	1
155	5	PCX706AP05	HANDWHEEL	1
156	6	PCX706AP06	DIAL RING	1
157	7	PCX706AP07	SPRING PIECE	1
158	8	PCX706AP08	DIAL FLANGE	1
159	9	PCX706AP09	SCREW - CAP M5-0.8 X 12	3
160	10	PCX706AP10	SPRING 1 X 16 X 20.	1
161	11	PCX706AP11	SHIFTER SHAFT	1
162	12	PCX706AP12	SHIFTER	1
163	13	PCX706AP13	SCREW - SET M5-0.8 X 6	1
164	14	PCX706AP14	PIN - SPRING Φ4 X 20	3
165	15	PCX706AP15	GEAR SHAFT SEAT	1
166	16	PCX706AP16	KEY M4 X 4 X 10	1
167	17	PCX706AP17	KEY M4 X 4 X 12	1
168	18	PCX706AP18	GEAR SHAFT	1
169	19	PCX706AP19	SCREW - SET M5-0.8 X 8	2
170	20	PCX706AP20	GEAR 60T	1
171	21	PCX706AP21	GEAR 23T	1
172	22	PCX706AP22	SCREW - SET M16-1.5 X 12	2
173	23	PCX706AP23	APRON BODY	1
174	24	PCX706AP24	GEAR 53T	1
175	25	PCX706AP25	PIN - SPRING Φ4 X 20	1
176	26	PCX706AP26	GEAR SHAFT	1
177	27	PCX706AP27	SCREW - CAP M5-0.8 X 35	4
178	28	PCX706AP28	PIN - TAPER Φ5 X 28	4
179	29	PCX706AP29	WORM SEAT	1
180	30	PCX706AP30	C-RING EXT Φ12	1
181	31	PCX706AP31	WORM GEAR 17T	1
182	32	PCX706AP32	WORM	1
183	33	PCX706AP33	KEY M4 X 4 X 12	1
184	34	PCX706AP34	WORM SHAFT	1
185	35	PCX706AP35	SCREW - SET M4-0.7 X 8 (SLOTTED CONE)	1
186	36	PCX706AP36	COLLAR	1
187	37	PCX706AP37	PIN - SPRING Φ4 X 20	1
188	38	PCX706AP38	GEAR 34T	1
189	39	PCX706AP39	CAM SHAFT	1
190	40	PCX706AP40	PIN - STRAIGHT M8 X 24	2
191	41	PCX706AP41	HALF NUT	1
192	42	PCX706AP42	BRACKET - HALF NUT	1
193	43	PCX706AP43	SCREW - CAP M5-0.8 X 30	1
194	44	PCX706AP44	SCREW - SET M4-0.7 X 8 (SLOTTED CONE)	2
195	45	PCX706AP45	PIN - SPRING Φ4 X 20	1
196	46	PCX706AP46	BUSHING	2
197	47	PCX706AP47	STEEL BALL Φ5	2
198	48	PCX706AP48	SPRING 0.8 X 4 X 14	2
199	49	PCX706AP49	SCREW - SET M6-1X6 (FLAT)	3
200	50	PCX706AP50	OIL LEVEL GUAGE A16 X 1.5	1
201	51	PCX706AP51	PIN - SPRING Φ4 X 25	1
202	52	PCX706AP52	CAM	1
203	53	PCX706AP53	FLANGE	1

CX706 Apron Assembly

No.	Part No.	Customer's Part No.	Description & Specification	QTY
204	54	PCX706AP54	COUNTERSUNK SCREW M5-0.8 X 12-Z2	2
205	55	PCX706AP55	PIN - SPRING Φ5 X 40	1
206	56	PCX706AP56	HANDLE BASE	1
207	57	PCX706AP57	PIN - SPRING Φ4 X 28	1
208	58	PCX706AP58	HANDLE BASE	1
209	59	PCX706AP59	HANDLE	2
210	60	PCX706AP60	LONGITUDIBNAL CROSS LABEL	1
211	61	PCX706AP61	SCREW - CAP M3-0.5 X 6	4
212	62	PCX706AP62	SCREW - CAP M5-0.8 X 35	1
213	63	PCX706AP63	FEEDING BASE	1
214	64	PCX706AP64	REVERSING SHAFT	1
215	65	PCX706AP65	SHAFT	1
216	66	PCX706AP66	SPACER BUSHING	1
217	67	PCX706AP67	IDLER GEAR 20T	1
218	68	PCX706AP68	AXLE	1
219	69	PCX706AP69	LOCKING WHEEL	1
220	70	PCX706AP70	AXLE	1
221	71	PCX706AP71	SCREW - SET M4-0.7 X 8 (SLOTTED CONE)	1
222	72	PCX706AP72	SCREW - SET M6-1.0 X 6 (CYLINDRICAL END)	1

CX706 Tailstock, Bed Assembly

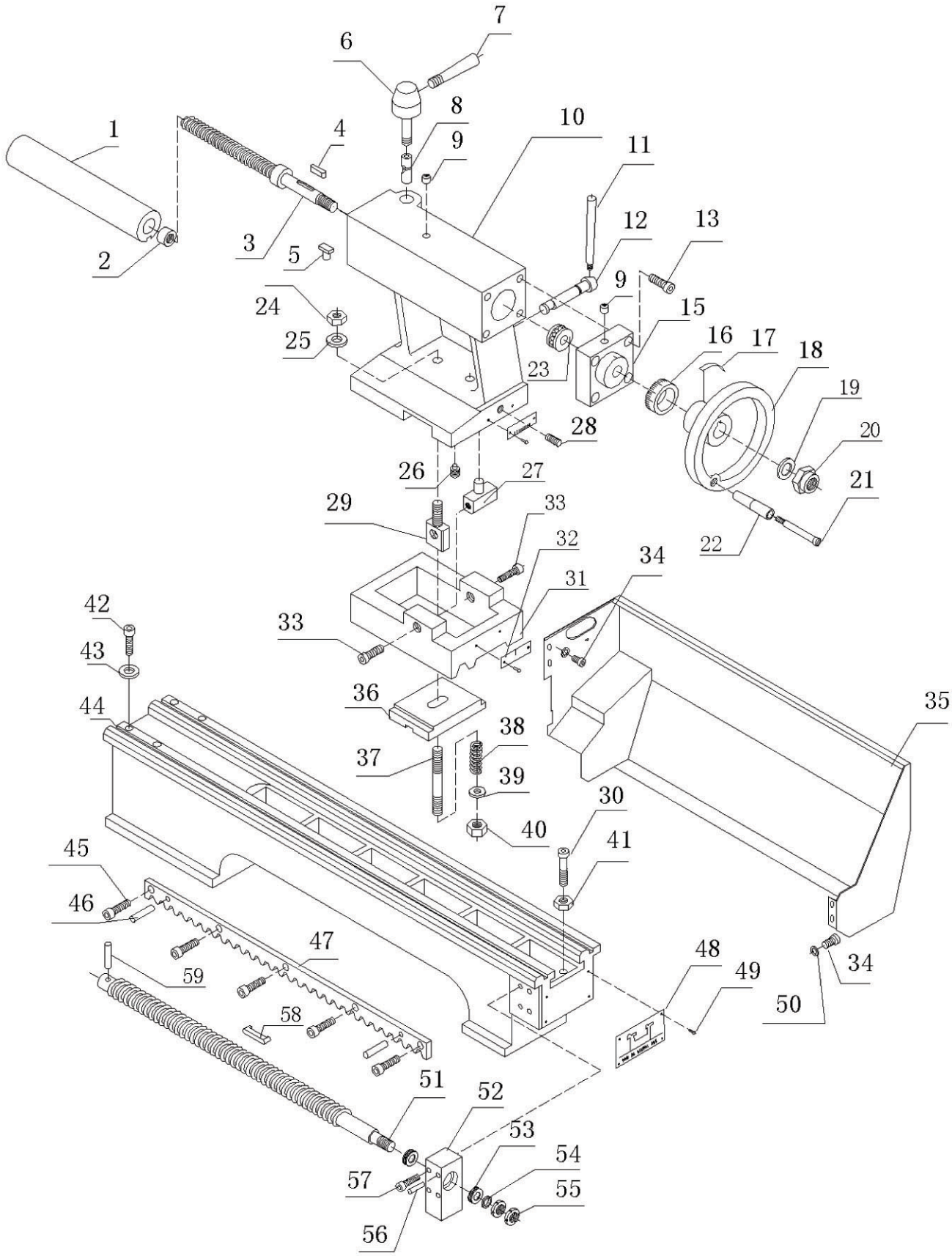

CX706 Tailstock Bed Assembly

No.	Part No.	Customer's Part No.	Description & Specification	QTY
223	1	PCX706TS01	TAILSTOCK QUILL	1
224	2	PCX706TS02	LEADSCREW NUT	1
225	3	PCX706TS03	LEADSCREW T12 X 10 TPI	1
226	4	PCX706TS04	KEY 4 X 4 X 15	1
227	5	PCX706TS05	KEY - FEATURE JY240-10-28	1
228	6	PCX706TS06	LOCK HANDLE SEAT	1
229	7	PCX706TS07	HANDLE	1
230	8	PCX706TS08	CLAMPING SLEEVE	1
231	9	PCX706TS09	OIL CUP Φ6	2
232	10	PCX706TS10	TAILSTOCK BODY	1
233	11	PCX706TS11	LEVER - LOCK	1
234	12	PCX706TS12	ECCENTRIC SHAFT	1
235	13	PCX706TS13	SCREW - CAP M5-0.8 X 16	4
237	15	PCX706TS15	SQUARE FLANGE	1
238	16	PCX706TS16	GRADUATED FRICTION DAIL	1
239	17	PCX706TS17	SPRING PIECE (JY240V-10-13/1)	1
240	18	PCX706TS18	HANDWHEEL	1
241	19	PCX706TS19	WASHER - FLAT M8	1
242	20	PCX706TS20	NUT - ACORN M8-1.25	1
243	21	PCX706TS21	HANDWHEEL HANDLE BOLT	1
244	22	PCX706TS22	HANDWHEEL HANDLE	1
245	23	PCX706TS23	BEARING 51101 i.e THRUST	1
246	24	PCX706TS24	NUT - HEX M10-1.5	1
247	25	PCX706TS25	WASHER - FLAT Φ10	1
248	26	PCX706TS26	SCREW - SET M6-1.0 X 10	1
249	27	PCX706TS27	ADJUSTING BLOCK	1
250	28	PCX706TS28	SCREW - SET M6-1.0 X 16	1
251	29	PCX706TS29	CLAMPING BOLT (SPECIAL)	1
252	30	PCX706TS30	SCREW - CAP M8-1.25 X 25	1
253	31	PCX706TS31	TAILSTOCK BASE	1
254	32	PCX706TS32	ZERO MARK LABEL	1
255	33	PCX706TS33	SCREW - CAP M8-1.25 X 30	2
256	34	PCX706TS34	SCREW - CAP M5-0.8 X 8	4
257	35	PCX706TS35	SPLASH GUARD	1
258	36	PCX706TS36	CLAMPING PLATE	1
259	37	PCX706TS37	STUD M12/M10 X 69 THREADED DOUBLE END	1
260	38	PCX706TS38	SPRING Φ13 X Φ1 X 62	1
261	39	PCX706TS39	WASHER - FLAT Φ12	1
262	40	PCX706TS40	NUT - HEX M12-1.75	1
263	41	PCX706TS41	NUT - HEX M8-1.25	1
264	42	PCX706TS42	SCREW - CAP M8-1.25X30	4
265	43	PCX706TS43	WASHER FLAT Φ6	4
266	44	PCX706TS44	BED	1
267	45	PCX706TS45	SCREW - CAP M5-0.8 X 10	5
268	46	PCX706TS46	LOCATING PIN Φ6X25 SHEAR PIN	2
269	47	PCX706TS47	RACK	1
270	48	PCX706TS48	HARDENING LABEL	1
271	49	PCX706TS49	RIVET Φ2 X 6	4
272	50	PCX706TS50	WASHER - FLAT Φ5	4
273	51	PCX706TS51	LONGITUDINAL LEADSCREW T20 X 8TPI	1
274	52	PCX706TS52	BRACKET	1
275	53	PCX706TS53	BEARING 51101 i.e THRUST	2

CX706 Tailstock Bed Assembly

No.	Part No.	Customer's Part No.	Description & Specification	QTY
276	54	PCX706TS54	WASHER - FLAT Φ15	1
277	55	PCX706TS55	NUT - HEX M12-1.25	1
278	56	PCX706TS56	PIN - (LOCATING) Φ6 X 25.	2
279	57	PCX706TS57	SCREW - CAP M6-1 X 12	2
280	58	PCX706TS58	KEY - FLAT 5 X 5 X 25	1
281	59	PCX706TS59	PIN - TAPER Φ3 X 22 (BRASS)	1

CX706 Electrical Box Assembly

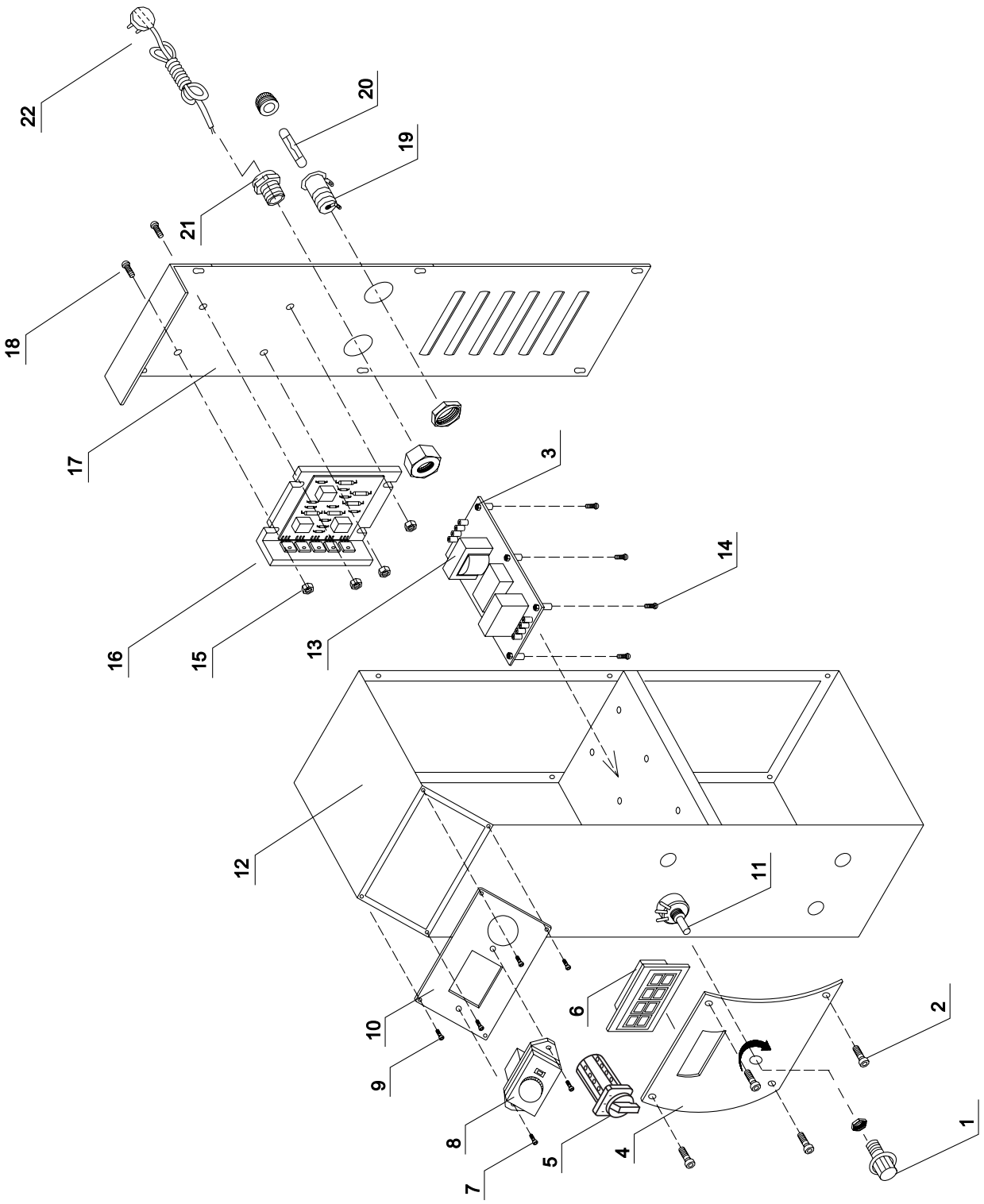

CX706 Electrical Box Assembly

No.	Part No.	Customer's Part No.	Description & Specification	QTY
282	1	PCX706EB01	KNOB - SPEED CONTROL	1
283	2	PCX706EB02	SCREW - CAP M3-0.5 X 6	4
284	3	PCX706EB03	NUT - HEX M4-0.7	4
285	4	PCX706EB04	LABEL	1
286	5	PCX706EB05	SWITCH - FOR / REV ZH-A	1
287	6	PCX706EB06	SPEED DISPLAY	1
288	7	PCX706EB07	SCREW M4-0.7 X 14	2
289	8	PCX706EB08	SWITCH - MAG KJD-17B-110V	1
290	9	PCX706EB09	SCREW - CAP M4-0.7 X 10	4
291	10	PCX706EB10	COVER PLATE	1
292	11	PCX706EB11	SWITCH - SPEED CONTROL (POTENTIOMETER)	1
293	12	PCX706EB12	ELECTRICAL BOX	1
294	13	PCX706EB13	FILTER	1
295	14	PCX706EB14	SCREW - M3-0.5 X 16	6
296	15	PCX706EB15	NUT - HEX M4-0.7	4
297	16	PCX706EB16	SPEED CONTROL BOARD	1
298	17	PCX706EB17	PANEL COVER	1
299	18	PCX706EB18	SCREW - CAP M4-0.7 X 12	4
300	19	PCX706EB19	FUSE HOLDER	1
301	20	PCX706EB20	FUSE 15A	1
302	21	PCX706EB21	STRAIN RELIEF M16 X 2	1
303	22	PCX706EB22	PLUG	1

CX706 Quadrant Assembly

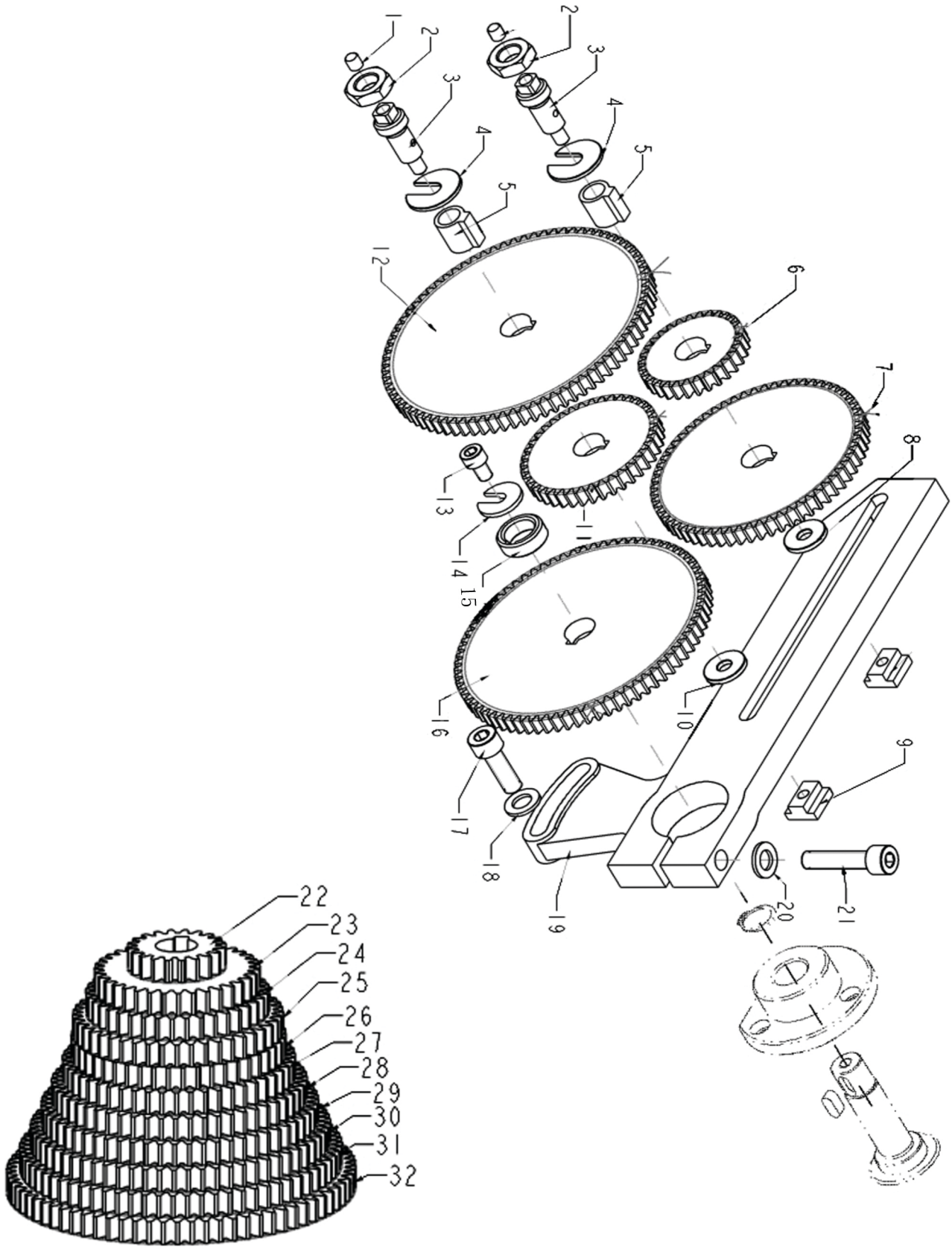

CX706 Quadrant Assembly

No.	Part No.	Customer's Part No.	Description & Specification	QTY
304	1	PCX706QA01	OIL CUP Φ6	2
305	2	PCX706QA02	NUT - HEX M12-1.25	2
306	3	PCX706QA03	SHAFT	2
307	4	PCX706QA04	WASHER - SPECIAL	2
308	5	PCX706QA05	BUSHING	2
309	6	PCX706QA06	CHANGE GEAR 30T	1
310	7	PCX706QA07	CHANGE GEAR 63T	1
311	8	PCX706QA08	WASHER - FLAT SPECIAL	1
312	9	PCX706QA09	NUT - TNUT	2
313	10	PCX706QA10	WASHER - FLAT SPECIAL	1
314	11	PCX706QA11	CHANGE GEAR 40T	1
315	12	PCX706QA12	CHANGE GEAR 80T	1
316	13	PCX706QA13	SCREW - CAP M6-1.0 X 10	1
317	14	PCX706QA14	WASHER - SPECIAL	1
318	15	PCX706QA15	SPACER	1
319	16	PCX706QA16	CHANGE GEAR 75T	1
320	17	PCX706QA17	SCREW - CAP M6-1.0 X 25	1
321	18	PCX706QA18	WASHER - FLAT Φ6	1
322	19	PCX706QA19	CHANGE GEAR SUPPORT	1
323	20	PCX706QA20	WASHER - FLAT Φ8	1
324	21	PCX706QA21	SCREW - CAP M8-1.25 X 35	1
325	22	PCX706QA22	CHANGE GEAR 20T	1
326	23	PCX706QA23	CHANGE GEAR 35T	1
327	24	PCX706QA24	CHANGE GEAR 39T	1
328	25	PCX706QA25	CHANGE GEAR 45T	1
329	26	PCX706QA26	CHANGE GEAR 46T	1
330	27	PCX706QA27	CHANGE GEAR 50T	1
331	28	PCX706QA28	CHANGE GEAR 55T	1
332	29	PCX706QA29	CHANGE GEAR 60T	1
333	30	PCX706QA30	CHANGE GEAR 65T	1
334	31	PCX706QA31	CHANGE GEAR 70T	1
335	32	PCX706QA32	CHANGE GEAR 76T	1

WARRANTY

CRAFTEX 3 YEARS LIMITED WARRANTY

Craftex warrants every product to be free from defects in materials and agrees to correct such defects where applicable. This warranty covers **three years** for parts and 90 days for labor (unless specified otherwise), to the original purchaser from the date of purchase but does not apply to malfunctions arising directly or indirectly from misuse, abuse, improper installation or assembly, negligence, accidents, repairs or alterations or lack of maintenance.

Proof of purchase is necessary.

All warranty claims are subject to inspection of such products or part thereof and Craftex reserves the right to inspect any returned item before a refund or replacement may be issued.

This warranty shall not apply to consumable products such as blades, bits, belts, cutters, chisels, punches etceteras.

Craftex shall in no event be liable for injuries, accidental or otherwise, death to persons or damage to property or for incidental contingent, special or consequential damages arising from the use of our products.

RETURNS, REPAIRS AND REPLACEMENTS

To return, repair, or replace a Craftex product, you must visit the appropriate Busy Bee Tools showroom or call 1-800-461-BUSY. Craftex is a brand of equipment that is exclusive to Busy Bee Tools.

For replacement parts directly from Busy Bee Tools, for this machine, please call 1-800-461-BUSY (2879), and have your credit card and part number handy.

- All returned merchandise will be subject to a minimum charge of 15% for re-stocking and handling with the following qualifications.
- Returns must be pre-authorized by us in writing.
- We do not accept *collect* shipments.
- Items returned for warranty purposes must be insured and shipped pre-paid to the nearest warehouse
- Returns must be accompanied with a copy of your original invoice as proof of purchase. Returns must be in an un-used condition and shipped in their original packaging a letter explaining your reason for the return. Incurred shipping and handling charges are not refundable.
- Busy Bee will repair or replace the item at our discretion and subject to our inspection.
- Repaired or replaced items will be returned to you pre-paid by our choice of carriers.
- Busy Bee reserves the right to refuse reimbursement or repairs or replacement if a third party without our prior authorization has carried out repairs to the item.
- Repairs made by Busy Bee are warranted for 30 days on parts and labour.
- Any unforeseen repair charges will be reported to you for acceptance prior to making the repairs.
- The Busy Bee Parts & Service Departments are fully equipped to do repairs on all products purchased from us with the exception of some products that require the return to their authorized repair depots. A Busy Bee representative will provide you with the necessary information to have this done.
- For faster service it is advisable to contact the nearest Busy Bee location for parts availability prior to bringing your product in for repairs.